EOAT Design and Build Service

From the simplest to the most complex EOAT, EMI specializes in designing and building customized End-of-Arm-Tooling— Priced Competitively.

Get started by sending us a sample part or 3D part file and a completed datasheet (see page 972). Our EOAT engineers will design a tool for you and provide you 3D CAD renderings. We'll also provide pricing for the tool should you want to purchase the completely assembled EOAT from EMI. Whether or not you purchase the tool from EMI, there's no cost or obligation to you for the engineering design service.

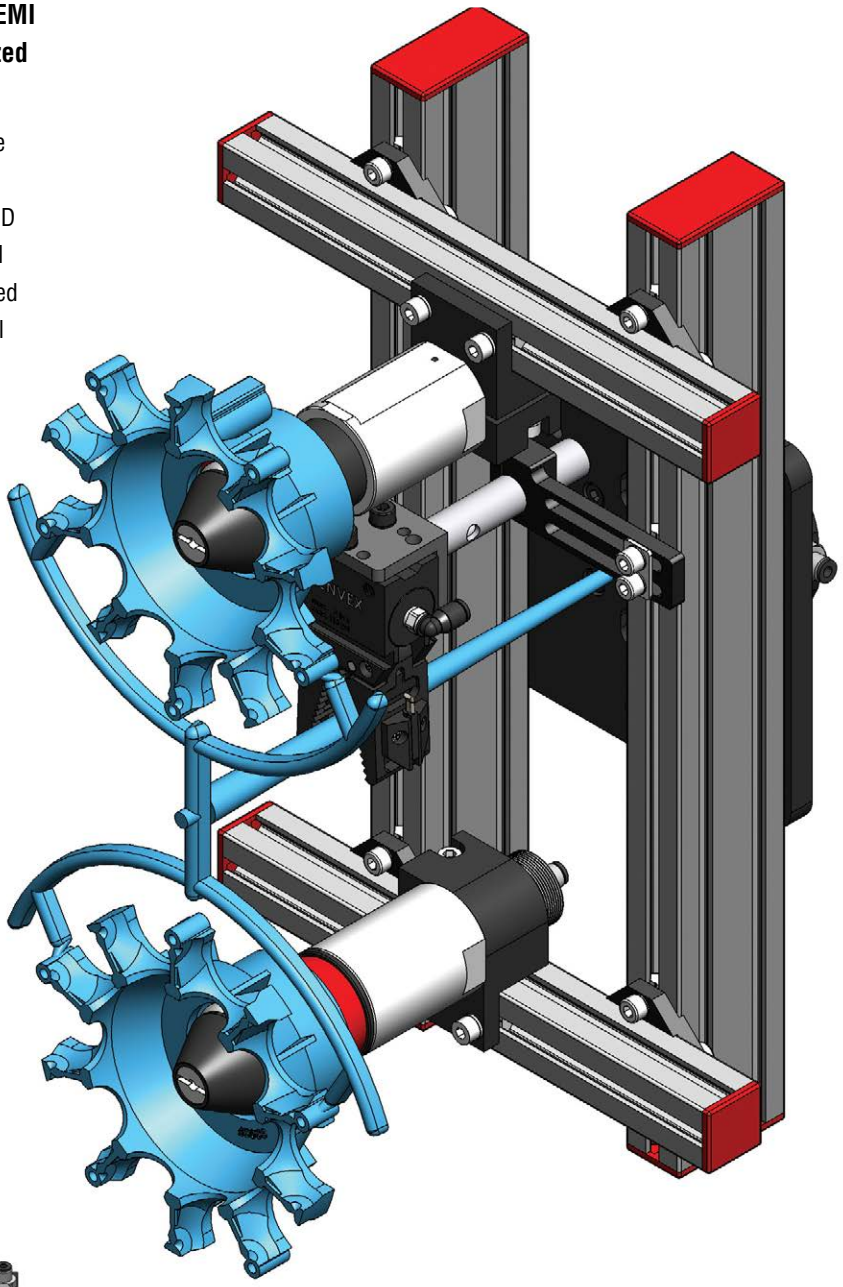

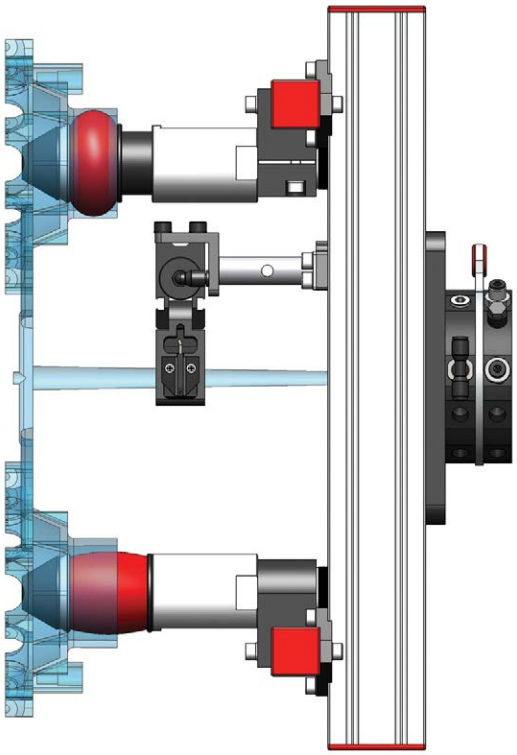

Specialty Gripper Overview

Magnetic Grippers p.472

Mini Grippers p.428

Electric Grippers p.474

These new Gimatic grippers are easy to set up and operate and use electricity from your PLC instead of compressed air. Both 2- and 3-jaw models use 24 volt DC and an M8x1, 3-pole standard connection.

Mini Gripper Fingers p.432

Mini Grippers p.434

ID Micro Grippers p.442

ID Expansion Grippers p.444

ID Gripping Air Hands p.456

Dock & Lock Grippers p.438

ID Grippers p.464

Needle Gripper for Fabric p.468

>ASS< Needle Grippers p.470

TFA - Mini Angular Gripper

- Single acting with spring opening
- Finger blanks available
- Optional suspension kit
- Easily mounted on EOAT using standard Ø10mm, Ø14mm, or Ø20mm clamps.

Finger Blanks available on page 432.

Part#	TFA10-25	TFA14-25	TFA20-25	TFA20-25S
Quick#	6694	6695	6696	6697
Price	$115.00	$120.00	$127.00	$169.00
Pressure range	36–116psi			
Stroke	20° to -5°			
Total closing force at 87 psi	7.5lbf at 10mm	14.5lbf at 15mm	38.5lbf at 25mm	38.5lbf at 25mm
Weight	12g	30g	95g	120g

When ordering, use Quick#s to ensure order accuracy.

Suspension Mounting

Suspension Kits

Quick#	Part#	For Gripper	Stroke	Price	Weight
6698	TFA10SP05	TFA10	5mm	$24.00	10g
6699	TFA14SP05	TFA14	5mm	$28.00	35g
6700	TFA20SP10	TFA20	10mm	$32.00	85g

TFA - Mini Angular Gripper

(Dimensioned drawings shown full scale)

TFA10-25, #6694

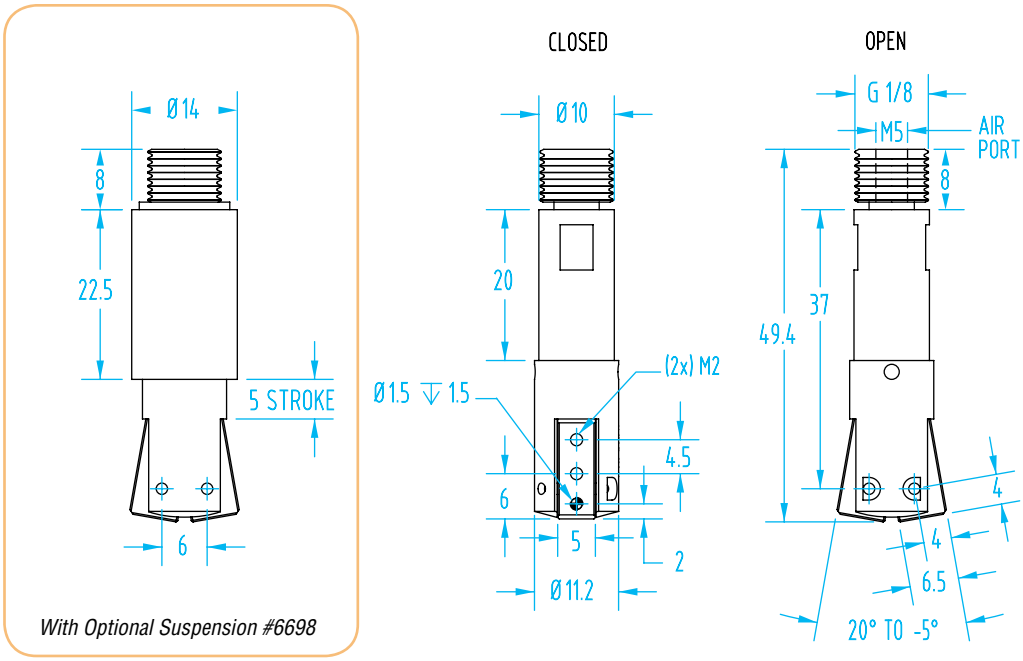

TFA14-25, #6695

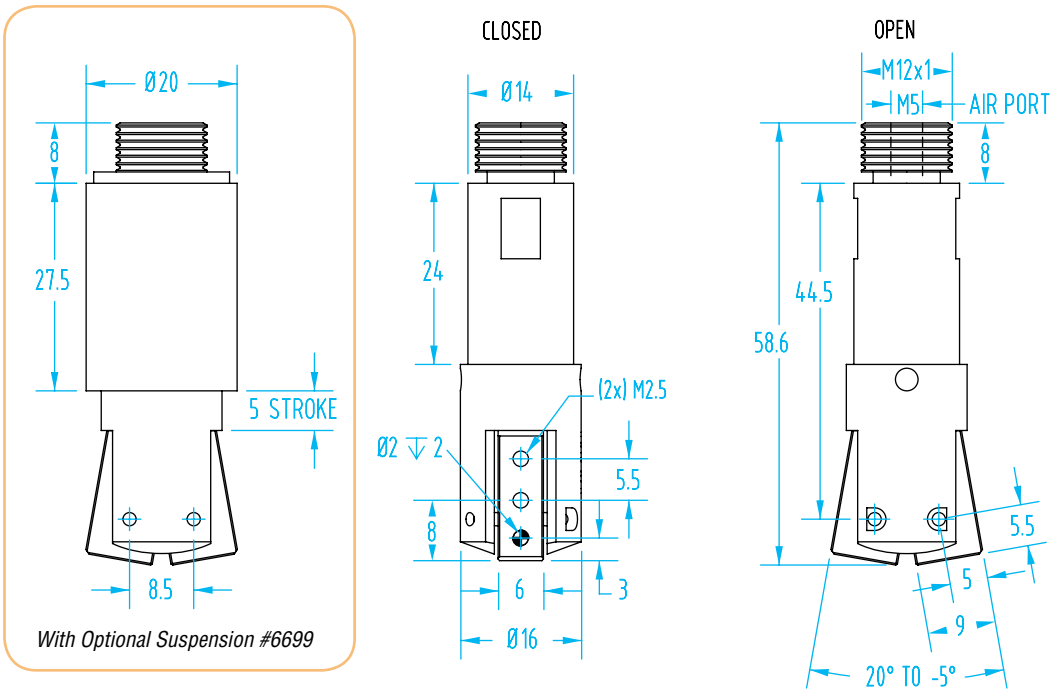

TFA - Mini Angular Gripper

(Dimensioned drawings shown full scale)

TFA20-25, #6696

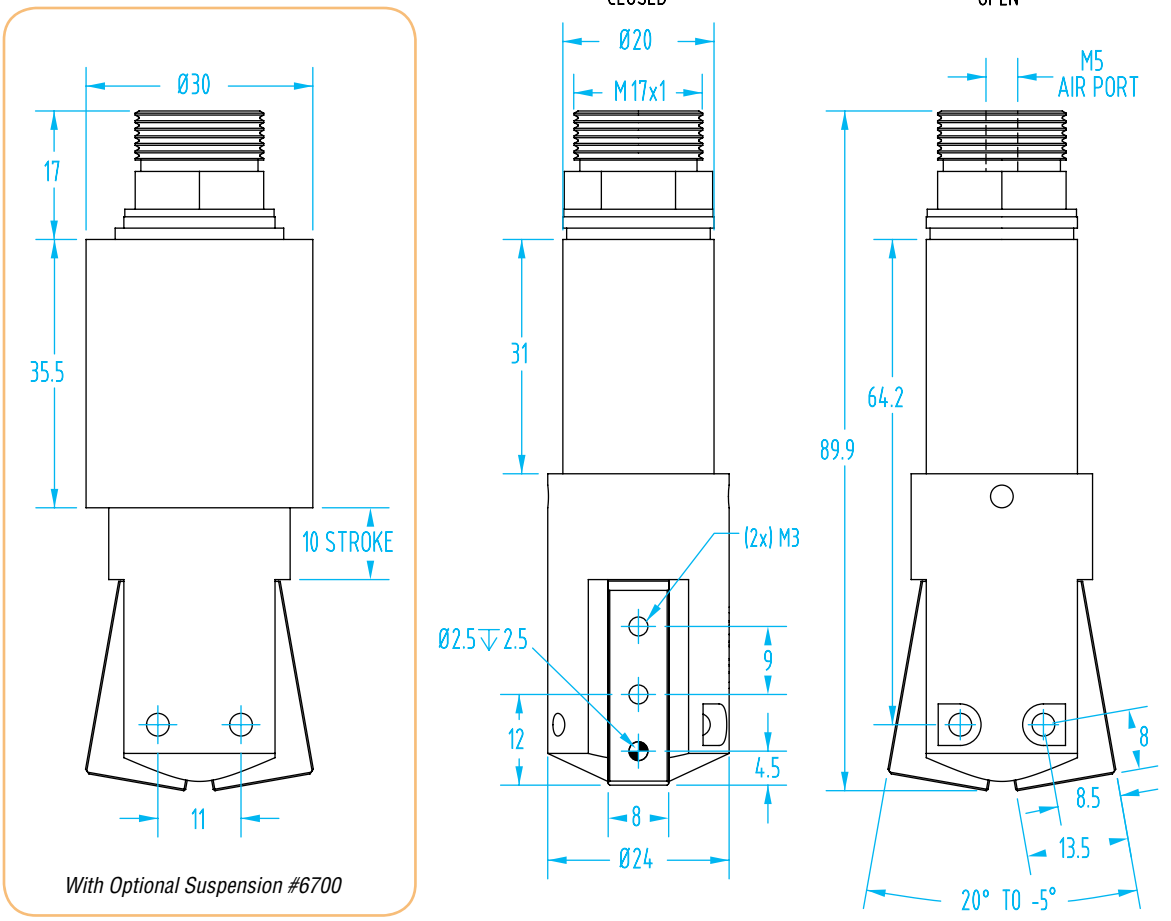

Application Examples

Mounts on standard Ø10mm, Ø14mm, and Ø20mm clamps

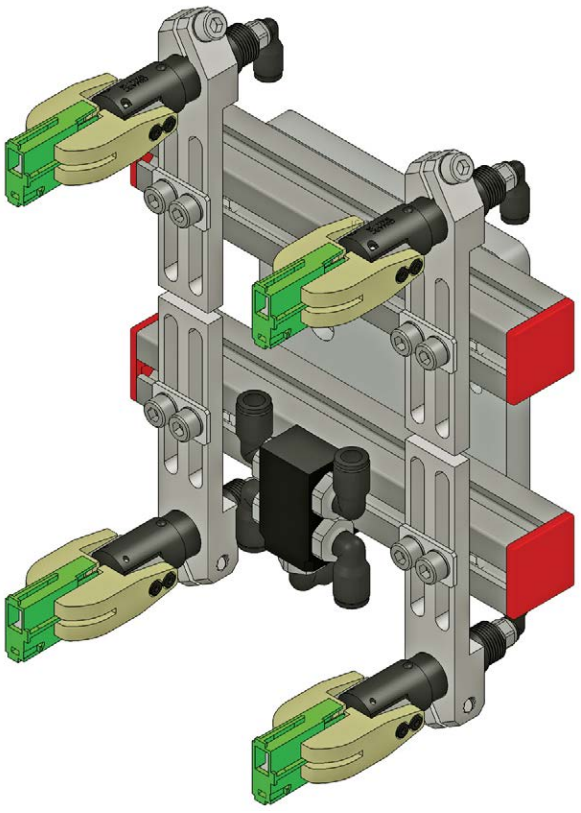

TFA - Mini Angular Gripper

TFA20-25S, #6697

(Dimensioned drawings shown full scale)

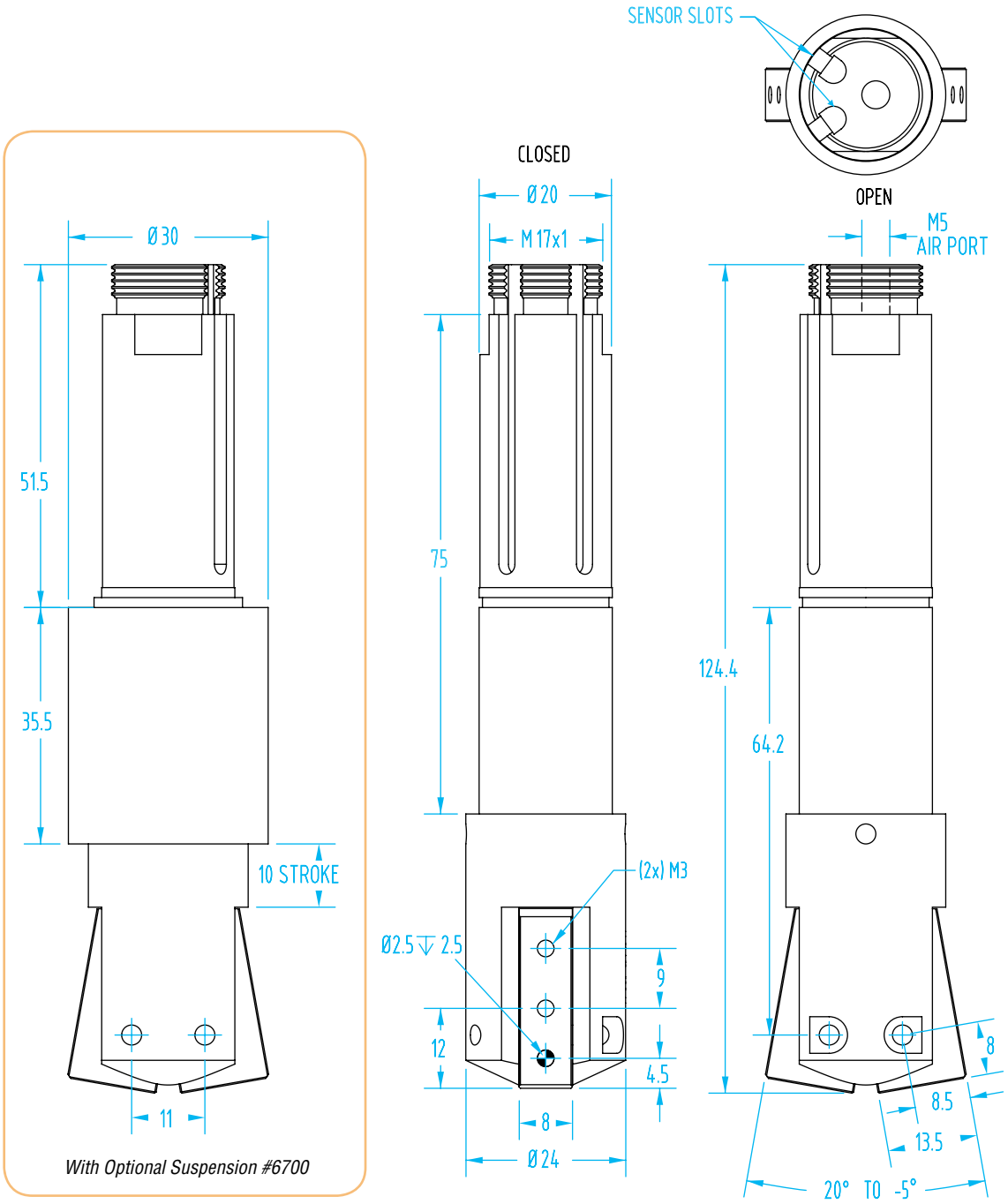

Sensors for TFA20-25S Angular Grippers (sold separately)

Quick#	Part#	Price	Signal	Connection
1882	SS4N225Y	$26.14	PNP	3-wire with 2.5m lead
6282	SS3N203Y	$29.96	PNP	3-wire with 0.3m lead & M8 male connector
1883	SS4M225Y	$26.14	NPN	3-wire with 2.5m lead
1884	SS3M203Y	$29.96	NPN	3-wire with 0.3m lead & M8 male connector
6278	SN4N225G	$26.14	PNP	3-wire with 2.5m lead
6357	SN4M225G	$26.14	NPN	3-wire with 2.5m lead
6277	SN3N203G	$29.96	PNP	3-wire with 0.3m lead & M8 male connector
6356	SN3M203G	$29.96	NPN	3-wire with 0.3m lead & M8 male connector
Note: M8 Extension cables Quick#'s 2582 & 2583 available on page 897.				

TFA Sprue Fingers

(Dimensioned drawings shown full scale)

Size 10

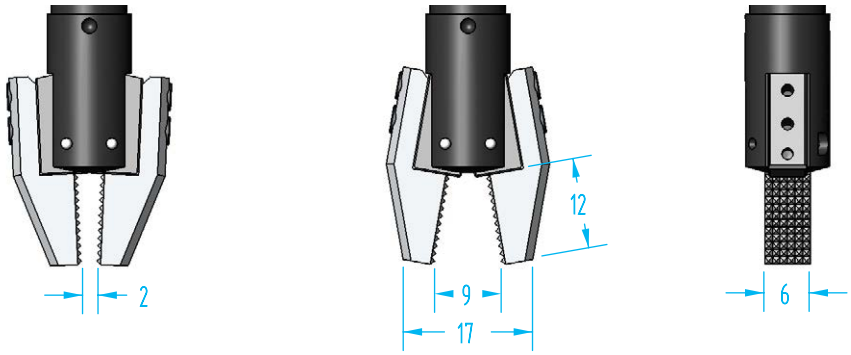

Size 14

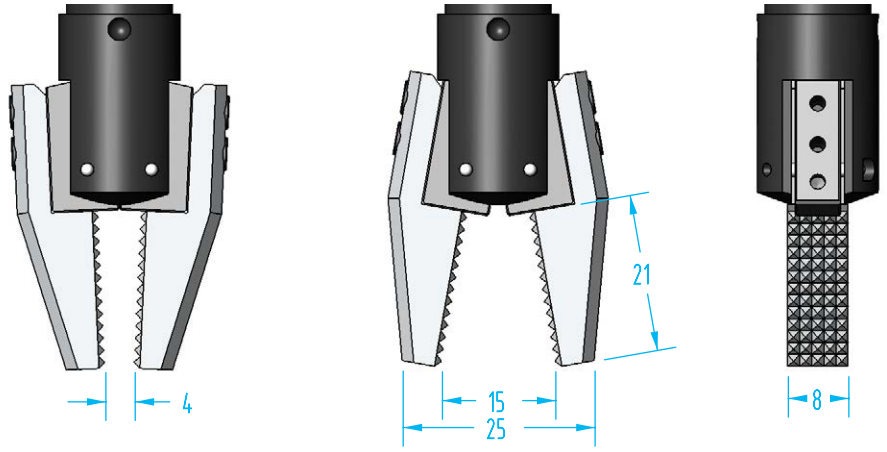

Size 20

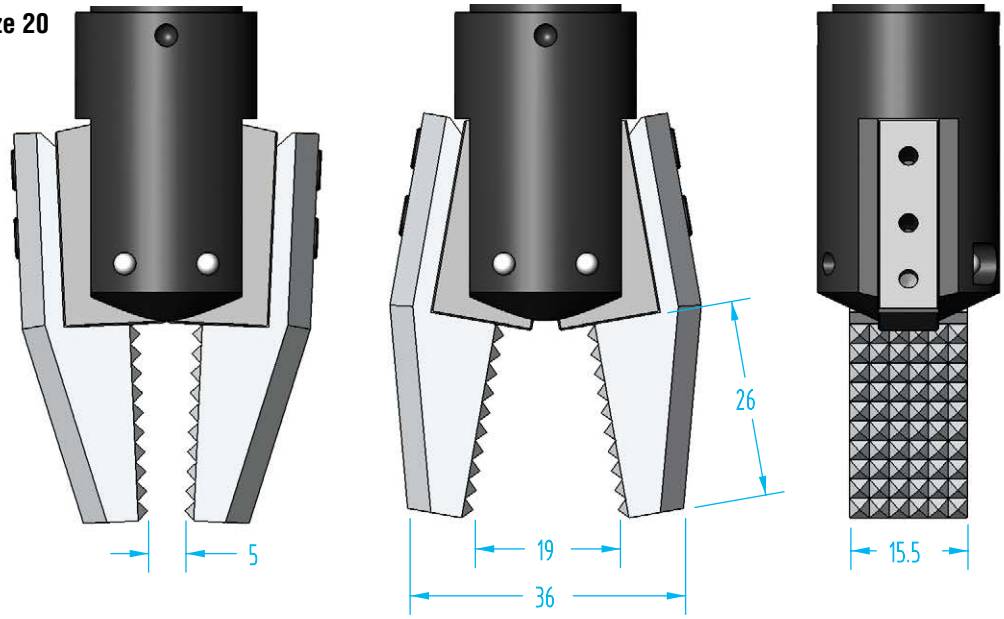

Sprue Fingers for TFA Grippers (priced per pair)

Part#	TFA10-SF	TFA14-SF	TFA20-SF
Quick#	**6740**	**6741**	**6742**
For Gripper:	TFA10	TFA14	TFA20
Price (per pair)	$32.00	$35.00	$38.00
Applicable sprue	Ø3–6mm	Ø6–9mm	Ø7–14mm

TFA Finger Blanks

(Dimensioned drawings shown full scale)

Finger Blanks for Size 10 TFA Gripper

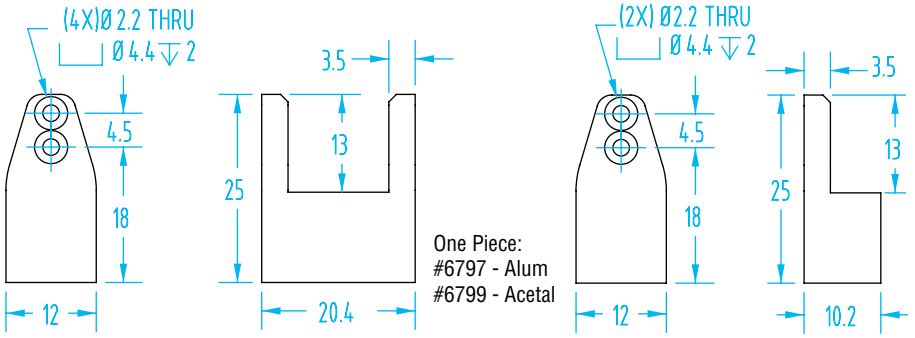

Finger Blanks for Size 14 TFA Gripper

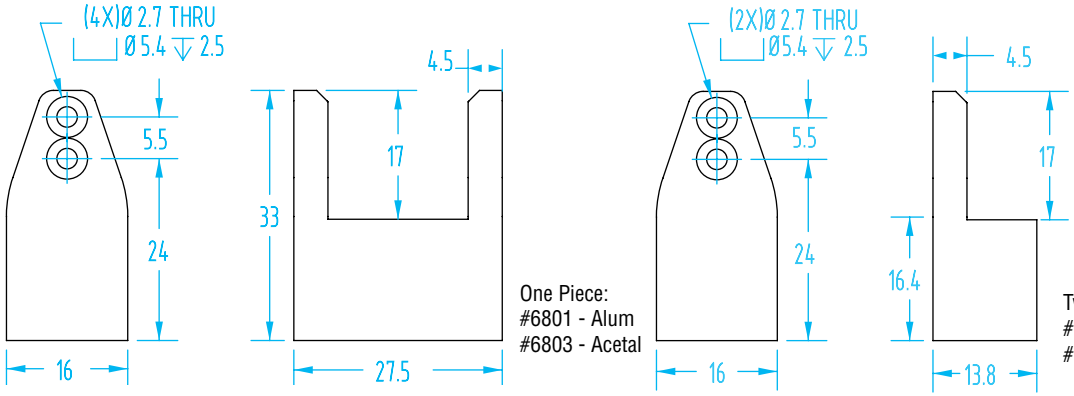

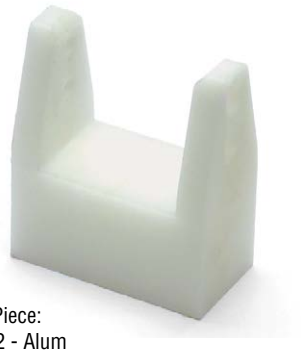

Finger Blanks for Size 20 TFA Gripper

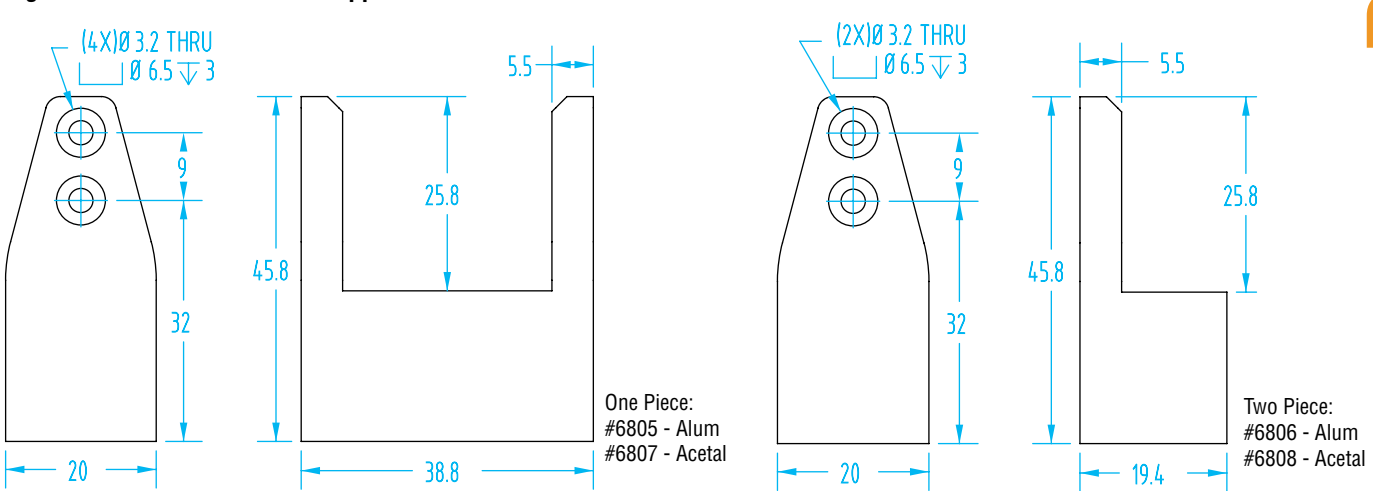

One-Piece Finger Blanks

Quick#	Part#	Material	Size	Weight	Price
6797	TFA10-1A	Aluminum	12x20	10g	$13.45
6799	TFA10-1D	Acetal	12x20	1g	$13.45
6801	TFA14-1A	Aluminum	16x28	23g	$15.60
6803	TFA14-1D	Acetal	16x28	1.5g	$15.60
6805	TFA20-1A	Aluminum	20x39	52g	$17.25
6807	TFA20-1D	Acetal	20x39	3g	$17.25

All include mounting screws.

Two-Piece Finger Blanks (priced per pair)

Quick#	Part#	Material	Size	Weight	Price
6798	TFA10-2A	Aluminum	12x20	5g each	$13.95
6800	TFA10-2D	Acetal	12x20	.5g each	$13.95
6802	TFA14-2A	Aluminum	16x28	12g each	$16.10
6804	TFA14-2D	Acetal	16x28	1g each	$16.10
6806	TFA20-2A	Aluminum	20x39	26g each	$17.75
6808	TFA20-2D	Acetal	20x39	1.5 each	$17.75

All include mounting screws.

Miniature Grippers - Size 8

(Dimensioned drawings shown full scale)

#1834
Size: 08
Panel Mount
Suspension

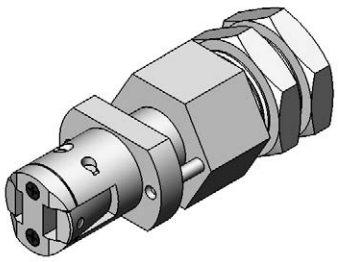

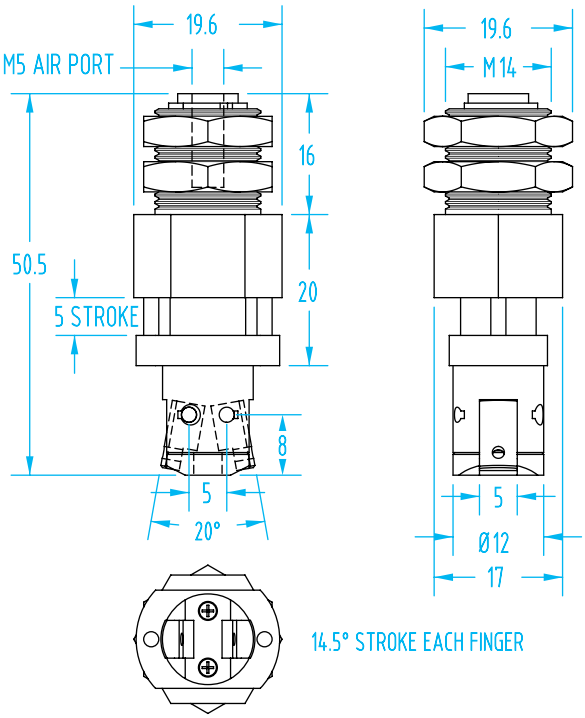

Quick#	Part#	Size	Style	Stroke	Grip Force*	Wt.	Price
1834	GSG-08A-SPMF	8	Panel Mount	5mm	6 lbf	58g	$109.09

** Force when compressed air is supplied at 87psi.*

#1832
Size: 08
Panel Mount

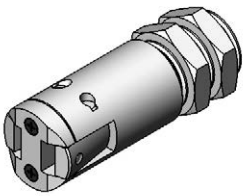

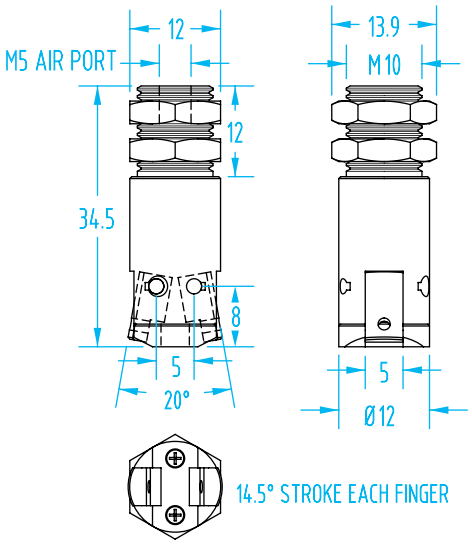

Quick#	Part#	Size	Style	Stroke	Grip Force*	Wt.	Price
1832	GSG-08A-SPM	8	Panel Mount	-	6 lbf	22g	$79.09

** Force when compressed air is supplied at 87psi.*

Miniature Grippers - Size 8

(Dimensioned drawings shown full scale)

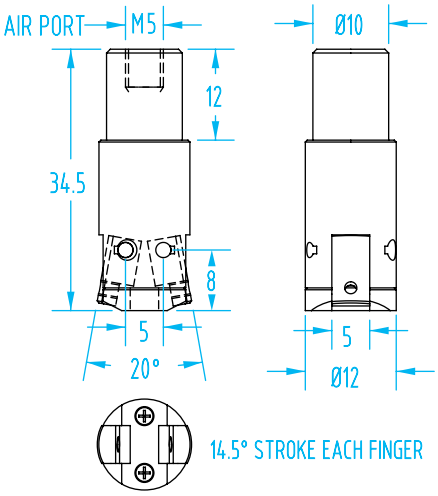

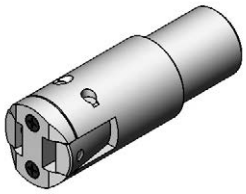

#1831
Size: 08
Shaft Style

Quick#	Part#	Size	Style	Stroke	Grip Force*	Wt.	Price
1831	GSG-08A-S	8	Shaft	-	6 lbf	20g	$75.45

** Force when compressed air is supplied at 87psi.*

Miniature Finger Blanks - Size 8

#1838

#1839

Machine these blanks to conform to your part, then cut in half to make two fingers.

Shown with #1836 finger blanks

#1836

#1837

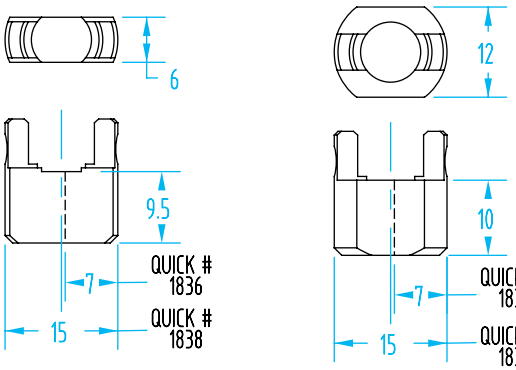

Miniature Finger Blanks - Size 08 Grippers

Quick#	Part#	Style	Size	Wt.	Price
1836	GSG-08A-FB06	Split	6x15	8g	$22.73
1837	GSG-08A-FB16	Split	12x15	14g	$22.73
1838	GSG-08A-FS06	One-Piece	6x15	8g	$21.82
1839	GSG-08A-FS16	One-Piece	12x15	14g	$21.82

Mounting screws included.

Miniature Grippers - Size 11

(Dimensioned drawings shown full scale)

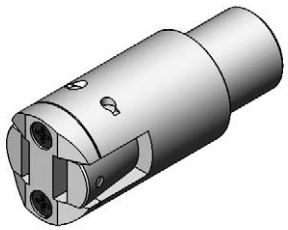

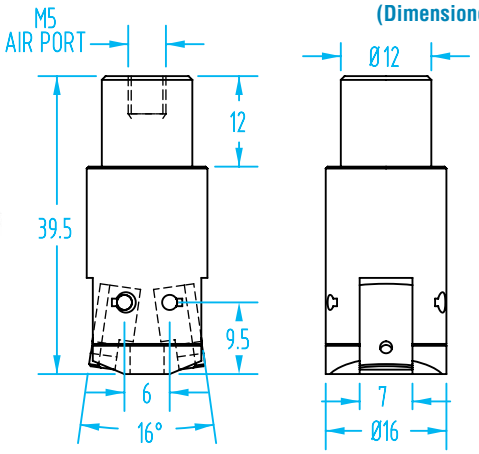

#727
Size: 11
Shaft Style

Quick#	Part#	Size	Style	Grip Force*	Wt.	Price
727	GSG-11A-S	11	Shaft	12 lbf	41g	$88.18

* Force when compressed air is supplied at 87psi.

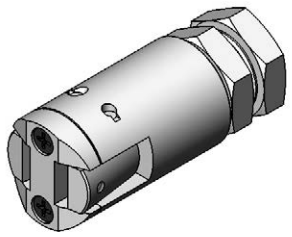

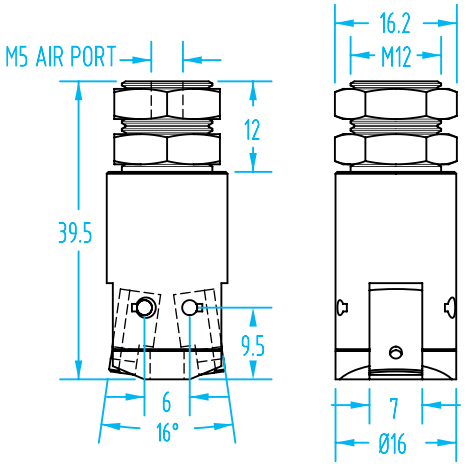

#1833
Size: 11
Panel Mount

Quick#	Part#	Size	Style	Grip Force*	Wt.	Price
1833	GSG-11A-SPM	11	Panel Mount	12 lbf	46g	$91.82

* Force when compressed air is supplied at 87psi.

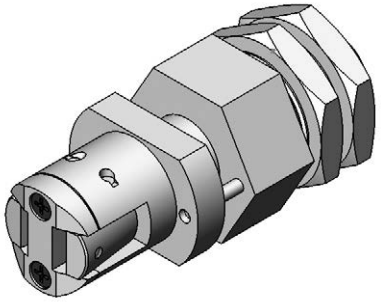

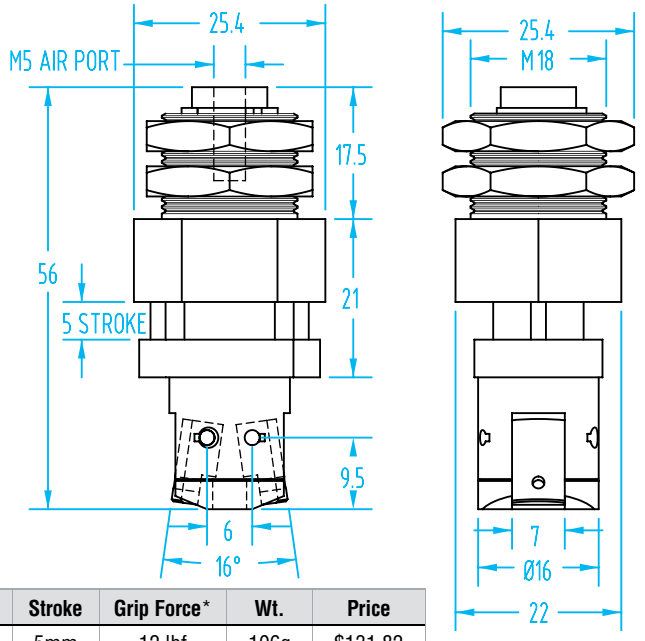

#1835
Size: 11
Panel Mount
Suspension

Quick#	Part#	Size	Style	Stroke	Grip Force*	Wt.	Price
1835	GSG-11A-SPMF	11	Panel Mount	5mm	12 lbf	106g	$131.82

* Force when compressed air is supplied at 87psi.

Miniature Grippers - Size 11

(Dimensioned drawings shown full scale)

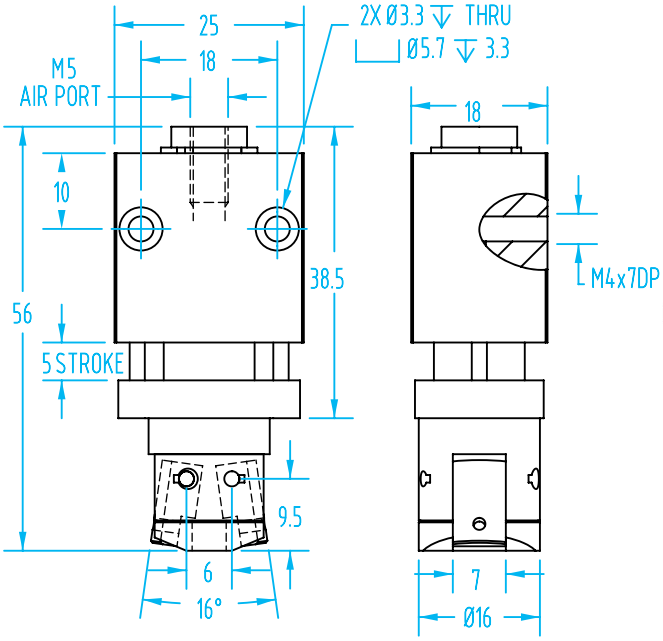

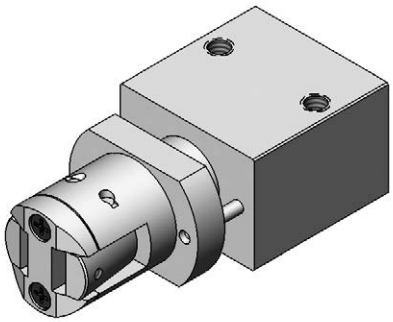

#728
Size: 11
Side Mount
Suspension

Quick#	Part#	Size	Style	Stroke	Grip Force*	Wt.	Price
728	GSG-11A-SF	11	Side Mount	5mm	12 lbf	117g	$142.73

** Force when compressed air is supplied at 87psi.*

Miniature Finger Blanks - Size 11

Machine these blanks to conform to your part, then cut in half to make two fingers.

#731

#732

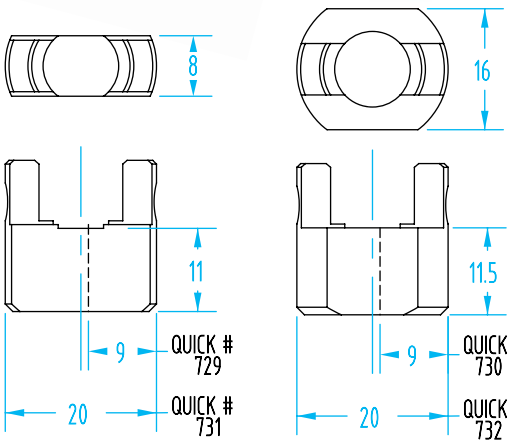

Shown with #729 finger blanks

#729

#730

Miniature Finger Blanks - Size 11 Grippers

Quick#	Part#	Style	Size	Wt.	Price
729	GSG-11A-FB08	Split	8x20	16g	$25.45
730	GSG-11A-FB20	Split	16x20	25g	$25.45
731	GSG-11A-FS08	One-Piece	8x20	17g	$24.55
732	GSG-11A-FS20	One-Piece	16x20	28g	$24.55

Mounting screws included.

Dock & Lock Gripper

Grippers for Engagement

The AGG30 is used to provide precise centering and clamping between the robot and the mold or the robot and a fixture. This is necessary, for example, when metal inserts must be placed in the mold before plastic injection. The gripper AGG30-B is mounted on the EOAT and the steel bushing AGG30-C on the mold or a fixture. After the robot approaches the mold, the AGG30-B is pressurized so it closes and engages the AGG30-C. AGG21-B and AGG30-B are double-acting with a safety spring to keep the gripper engaged even without compressed air (NC). AGG19-B is single-acting with reset spring (NO).

Part#	AGG19 B	AGG21 B	AGG30 B
Quick#	**7130**	**7128**	**6689**
Price	**$279.00**	**$315.00**	**$360.89**
Diameter	Ø20	Ø20	Ø30
Style	Single Acting	Double Acting	
Maximum axial load without compressed air before releasing	0lbf	134lbf	314lbf
Maximum axial load with compressed air before breakage	449lbf	449lbf	1124lbf
Pressure range	29–116 psi (NO)	58–116 psi (NO)	58–116 psi (NO)
Weight	85g	115g	390g

Locking Collar

Quick#	Part#	Diameter	Weight	Price
7129	AGG21-C	Ø20	25g	$23.50
6690	AGG30-C	Ø30	75g	$20.30

Optional Sensor Mounting Band

Quick#	Part#	Diameter	Price
7308	SWP 020	Ø20	$2.13
7309	SWP 030	Ø30	$2.13

See page 906 for sensors.

AGG19-B

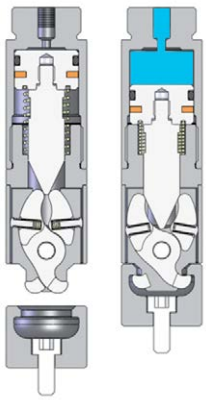

AGG21-B / AGG30-B

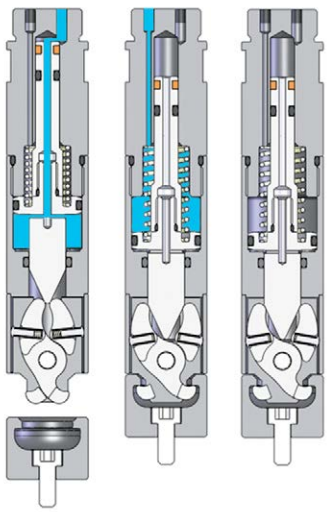

Dock & Lock Gripper

	AGG19 B	AGG21 B	AGG30 B
Quick#	7130	7128	6689
A	Ø20	Ø20	Ø30
B	M17x1	M17x1	M27x1
C	70.5	96.5	136
D	8	8	11
E	32	28	40
F	4	34	45.4
G	19.5	19.5	28.6
H	10	10	12
I	8	8	10
J	18	18	27
K	0	4.2	4.5
L	-	3.5	6.5
M	-	8	11
N	-	3.8	3.8
O	-	3	3
P	-	2.8	2.8
Q	M5	M3	M5
R	-	M3	M5

	AGG21 C	AGG30 C
Quick#	7129	6690
S	Ø20	Ø30
T	15.3	20.8
U	6.7	8
V	M4	M5

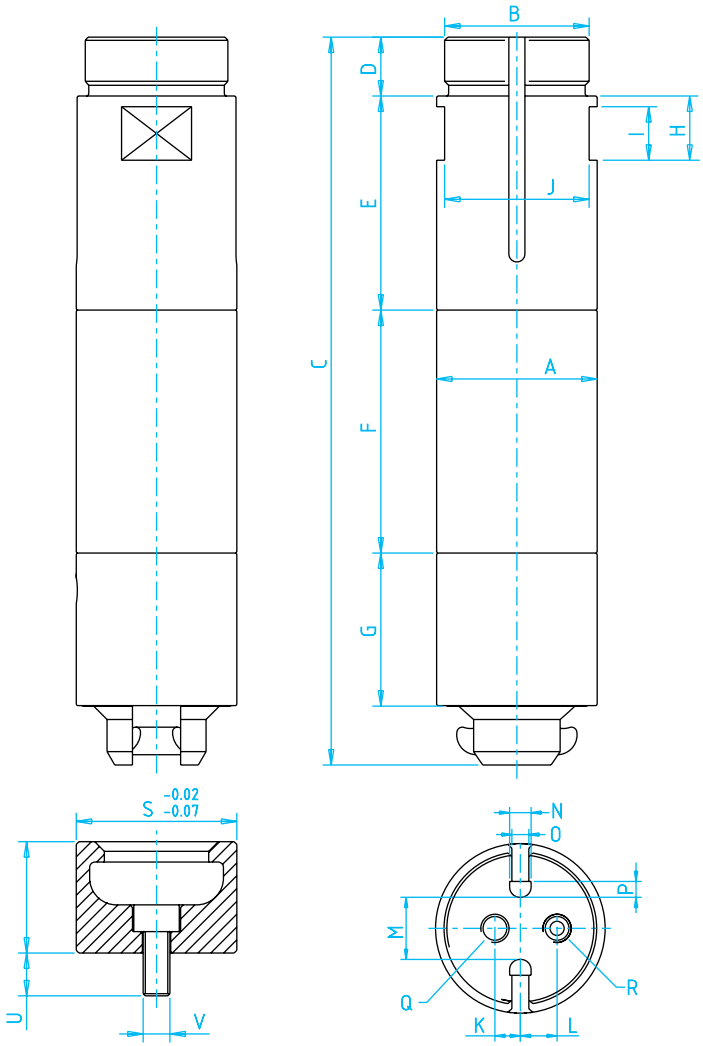

Application Example

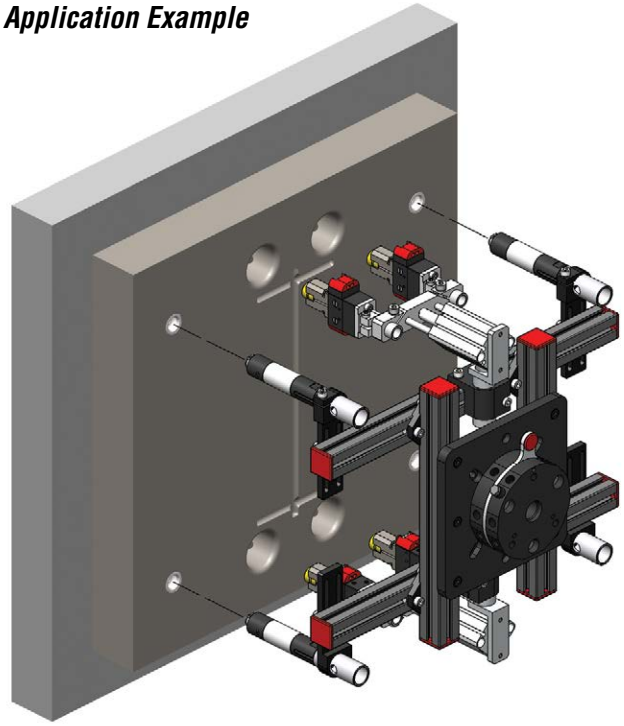

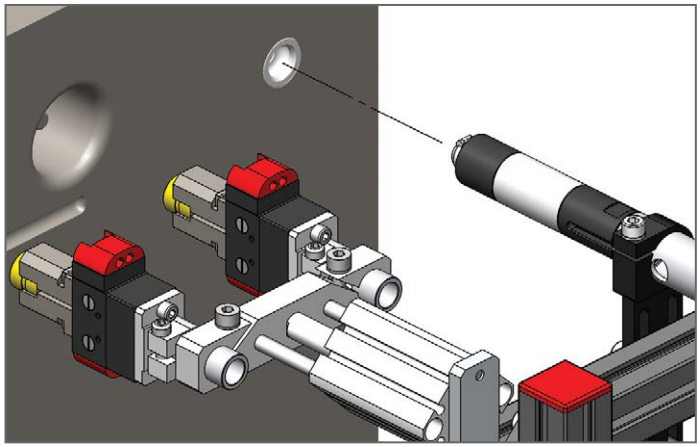

>ASS< Dock & Lock Gripper

- Used to limit force being applied to the robot arm.
- Use in applications when excessive force is necessary to extract part(s) from the mold. Or, when excessive force is necessary to place insert(s) in the mold.
- Pressurized steel balls lock into the ZBU bushings.
- Magnetic piston for sensing lock or unlock positions.

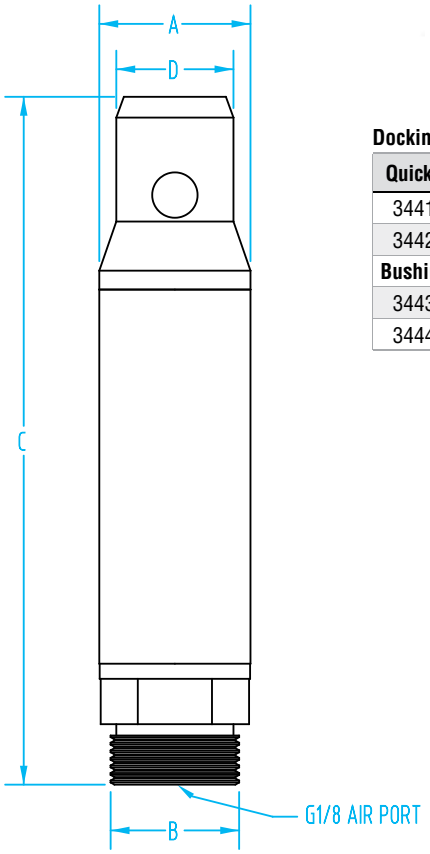

Docking Finger

Quick#	Part#	>ASS< #	Price	Closing Force at 87psi	Wt.
3441	ZTE-20-V	1-747-03-00	$430.00	78.68lbf	430g
3442	ZTE-30-V	1-747-30-00	$524.00	337.2lbf	524g
Bushing					
3443	ZBU-20-V	1-747-04-00	$66.00		66g
3444	ZBU-30-V	1-747-31-00	$80.00		80g

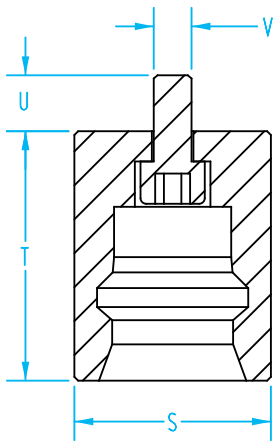

	A	B	C	D
3441	20	M17x1	91	15.5
3442	30	M27x1	133.5	25.5

	S	T	U	V
3443	26h7	33	7.5	M5
3444	40h7	43.5	10	M6

OFD - Expansion Finger

(Dimensioned drawings shown full scale)

- Single acting with spring reset.
- Clampable Ø20mm body.
- Several mounting options.
- Temperature range: 41–140°F.
- Pressure range: 44–116 psi.
- Elastic TPU expander has a 70° durometer.

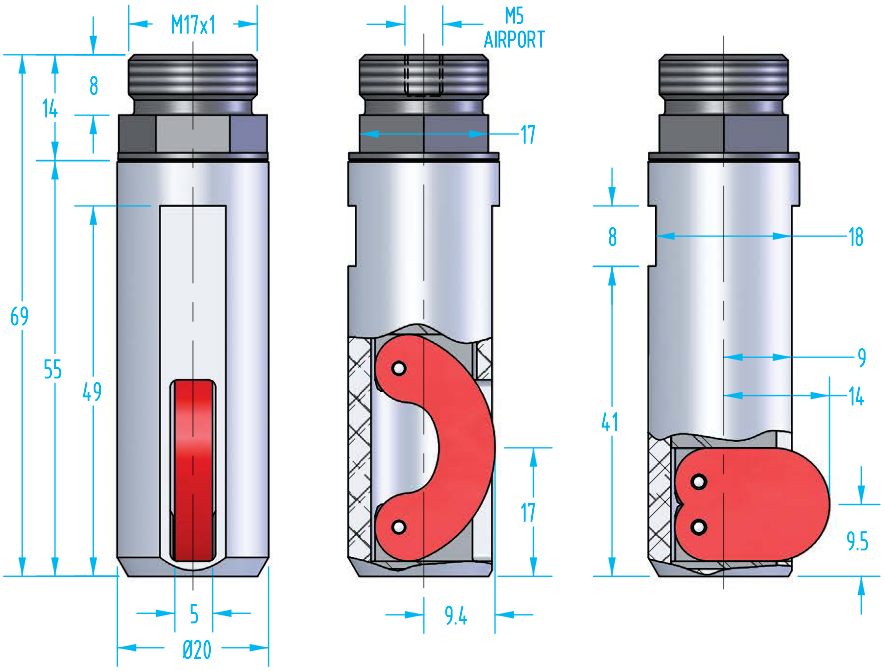

Expansion Finger

Quick#	Part#	Price	Closing Force at 87psi	Wt.
7251	OFD20	$79.00	32.6lbf	40g
Replacement Elastic TPU Expander				
7366	IR01	$1.50		

Application Example

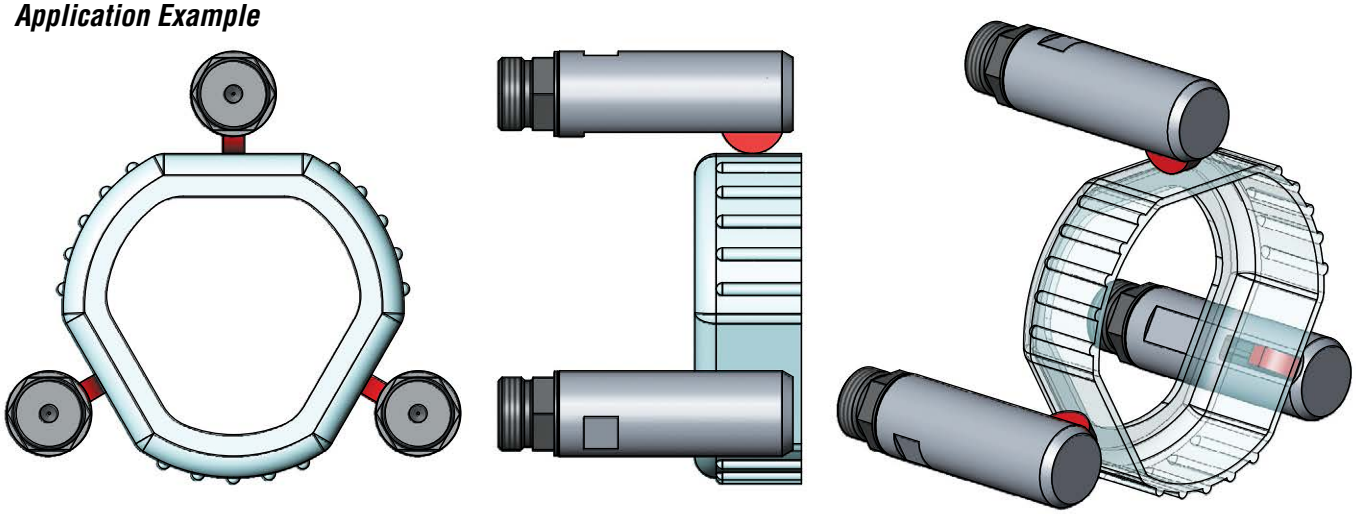

Expansion Micro Grippers

- Upward movement
- Grip diameter from Ø4.5 to Ø8.7mm.
- Silicone expander has a max. temperature of 392°F.
- NBR expander has a max. temperature of 212°F.
- Maximum operating pressure: 87psi.
- Replacement expanders available.
- Patented

Actual Size

Expansion Micro Grippers

Quick#	Part#	Material	Price	Wt.
6637	IFU04S01RT	Silicone	$112.77	7g
6636	IFU04N03RT	NBR	$112.77	7g
6639	IFU05S01RT	Silicone	$112.77	7g
6638	IFU05N03RT	NBR	$112.77	7g
6641	IFU06S01RT	Silicone	$112.77	8g
6640	IFU06N03RT	NBR	$112.77	8g
6643	IFU07S01RT	Silicone	$112.77	9g
6642	IFU07N03RT	NBR	$112.77	9g

When ordering, use Quick#s to ensure order accuracy.

Replacement Rings (priced per pair)

Quick#	Part#	For:	Material	Price
6943	IF04S01	IFU04S01RT	Silicone	$4.50
6944	IF04N03	IFU04N03RT	NBR	$4.50
6945	IF05S01	IFU05S01RT	Silicone	$4.50
6946	IF05N03	IFU05N03RT	NBR	$4.50
6947	IF06S01	IFU06S01RT	Silicone	$4.50
6948	IF06N03	IFU06N03RT	NBR	$4.50
6949	IF07S01	IFU07S01RT	Silicone	$4.50
6950	IF07N03	IFU07N03RT	NBR	$4.50

Expansion Micro Grippers

(Dimensioned drawings scaled 2:1)

	IFU04S01RT IFU04N03RT	IFU05S01RT IFU05N03RT	IFU06S01RT IFU06N03RT	IFU07S01RT IFU07N03RT
A1	40.9	41.7	42	42
A2	38.4	39.2	39.5	39.5
B1	9.9	11.2	11.5	11.5
B2	7.4	8.7	9	9
ØC1	Ø4.5	Ø5.6	Ø6.6	Ø7.6
ØC2	Ø5.4	Ø6.7	Ø7.6	Ø8.7
D	3.75x45°	3.25x45°	2.75x45°	2.4x45°
E	1 x 60°	1.3 x 60°	1.4 x 60°	1.5x60°

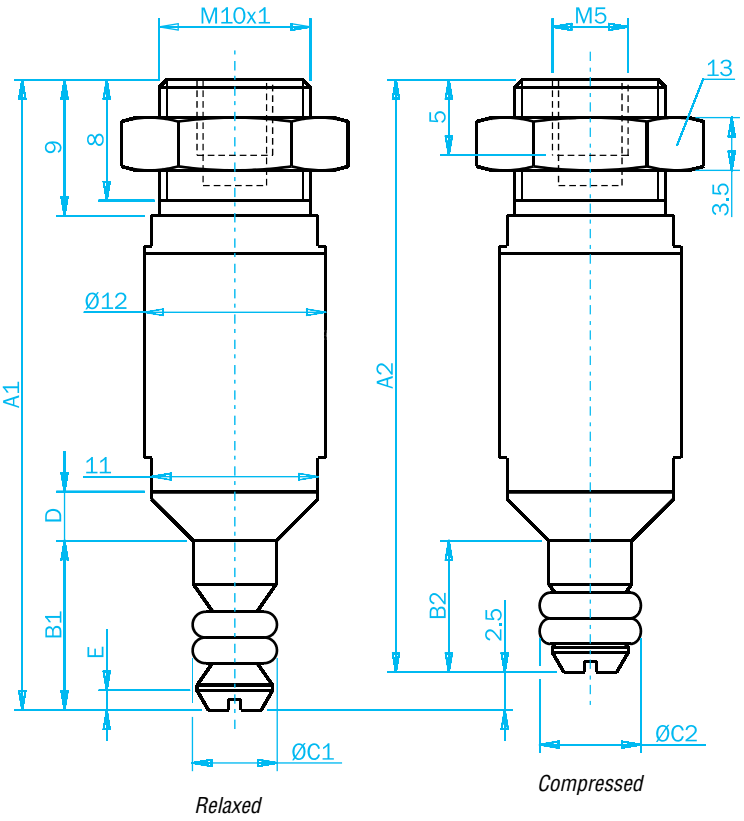

Application Example

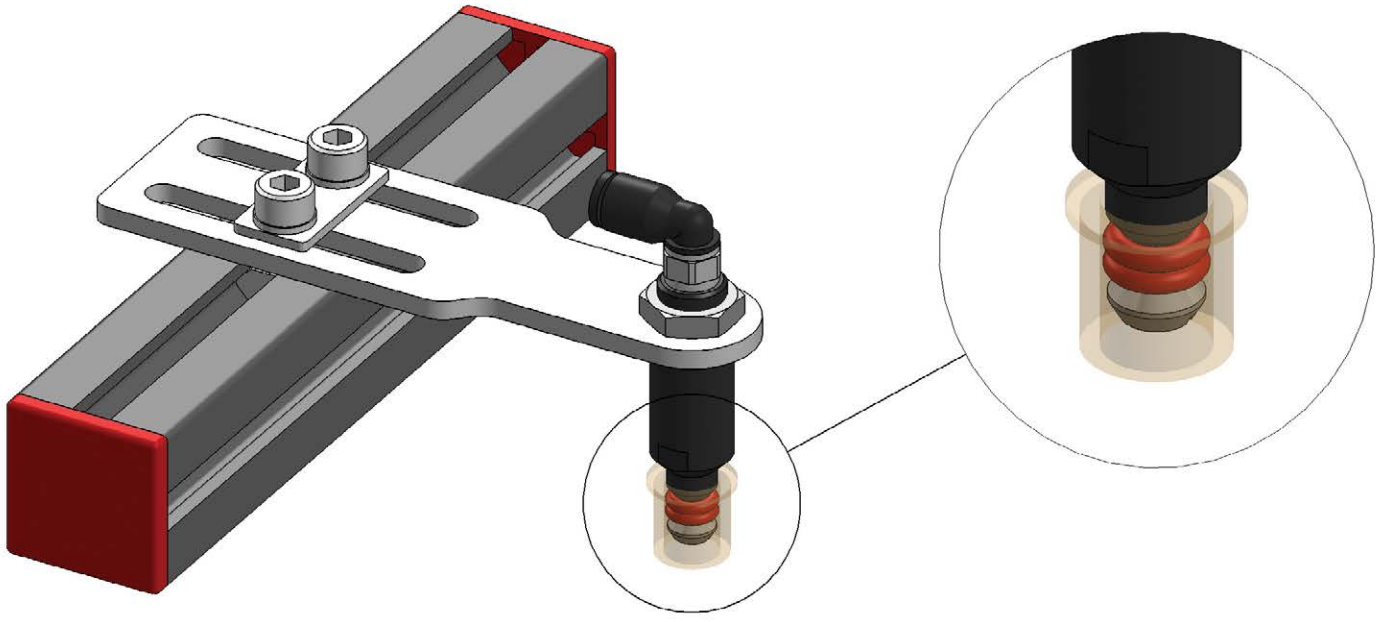

Expansion Grippers

(Dimensioned drawings shown full scale)

Gimatic's® Expansion Grippers rely on compressing an elastic expander rather than inflating a bladder. Gimatic's patented Expansion Grippers have better durability and uptime because leaks and blow outs are eliminated.

- The elastic part can be in Silicone or EPDM.
- Grip diameters from 8 to 85mm.
- Optional nose cones for centering.
- Optional proximity magnetic sensors.
- Use standard Ø14, 20, 30mm clamps for mounting.
- Optional mounting adaptors for thread mounting on page 455.

Sensors available, see page 906.

MFD - The MFD has a **downward** motion that compresses the expander. The OAL us unchanged.

MFU - The MFU has an **upward** motion that compresses the expander. The OAL is reduced.

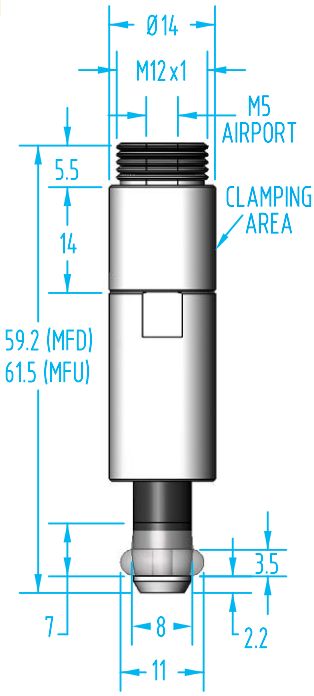

08–11 mm
MFD/MFU 08…

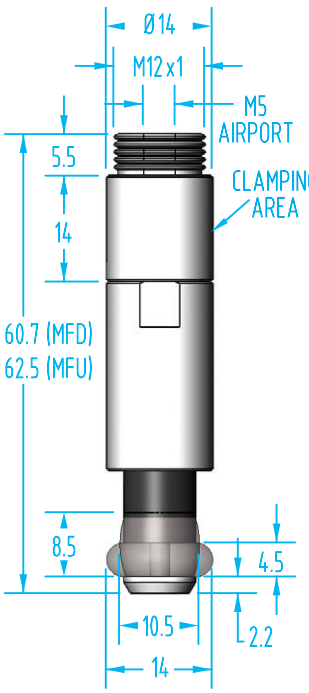

10.5–14 mm
MFD/MFU 10…

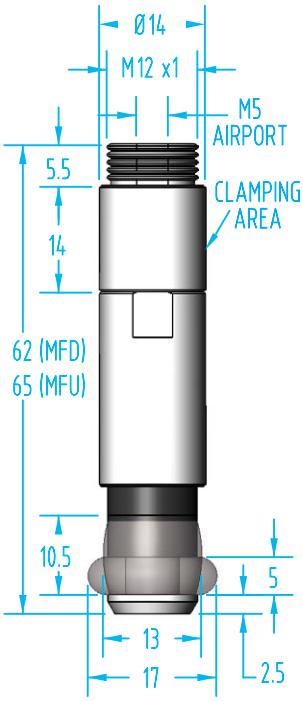

13–17 mm
MFD/MFU 12…

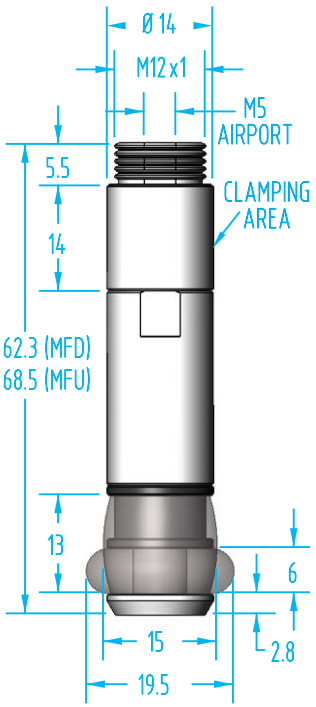

15–19.5 mm
MFD/MFU 14…

Expansion Grippers

(Dimensioned drawings shown full scale)

Mounting Examples

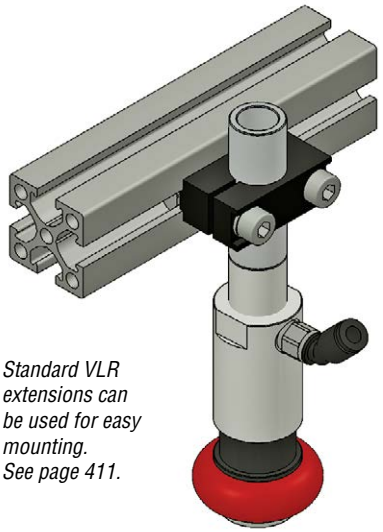

Standard VLR extensions can be used for easy mounting. See page 411.

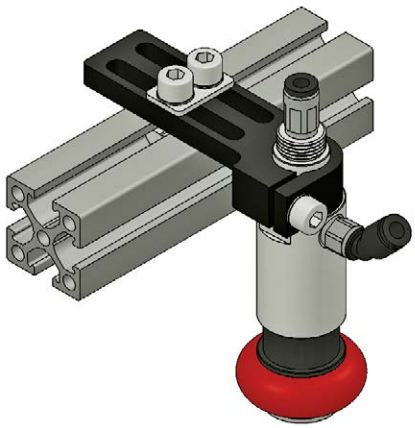

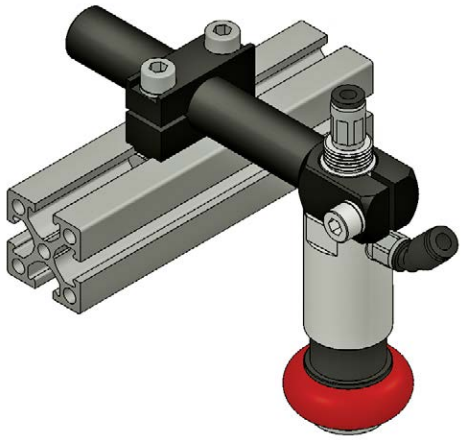

Standard Ø14mm, 20mm, and 30mm clamps can be used for easy mounting. See clamps starting on page 134.

See page 450 for pricing.

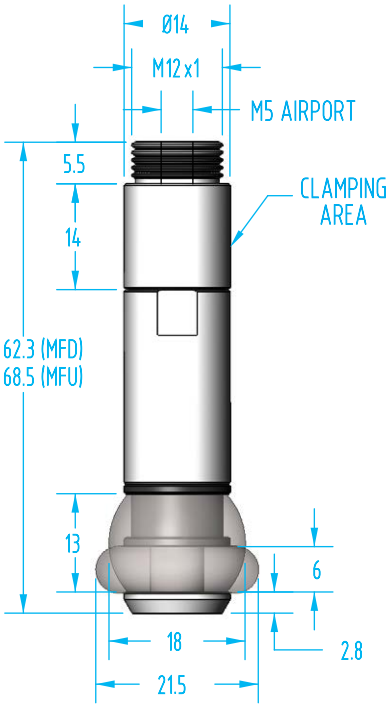

18–21.5 mm
MFD/MFU 16…

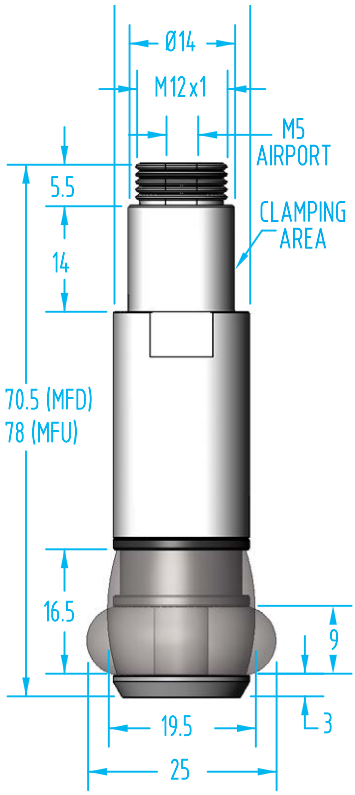

19.5–25 mm
MFD/MFU 18…

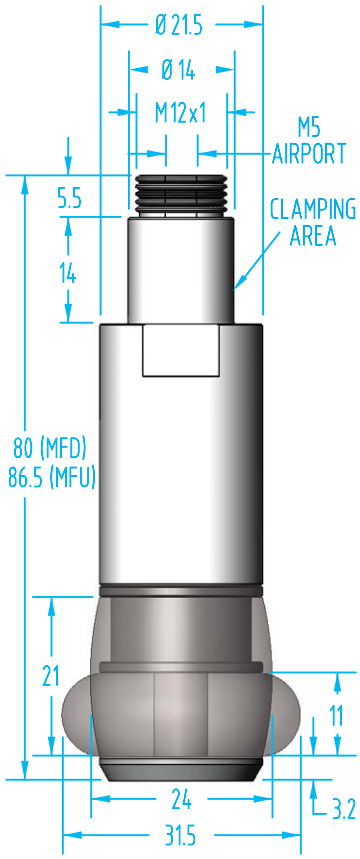

24–31.5 mm
MFD/MFU 22…

Expansion Grippers

(Dimensioned drawings shown full scale)

Silicone or EPDM?

The elastic expander can be red silicone or black EPDM.

Silicone is non-marking, has a wider temperature range, and longer life span. Maximum temperature is 392˚ F.

EPDM is non-marking and provides more friction for a stronger grip. Maximum temperature is 284˚ F.

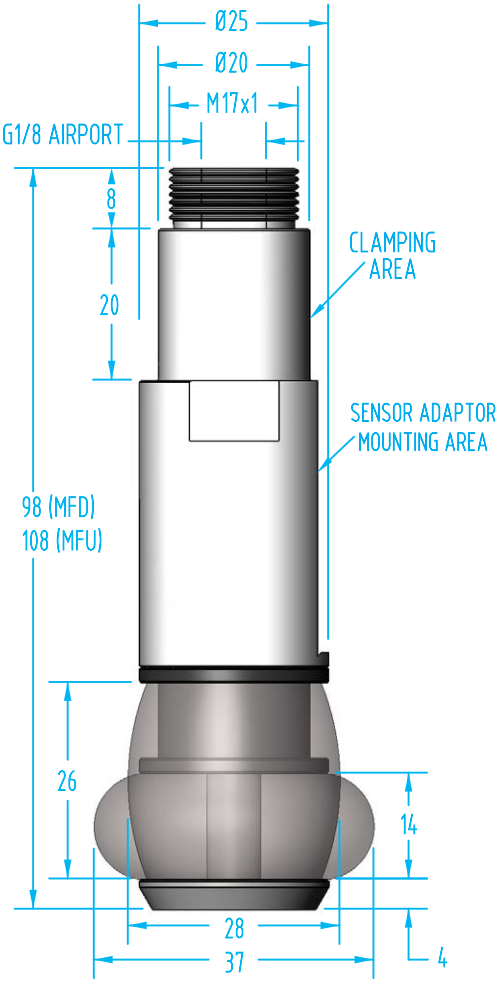

28–37 mm
MFD/MFU 27…

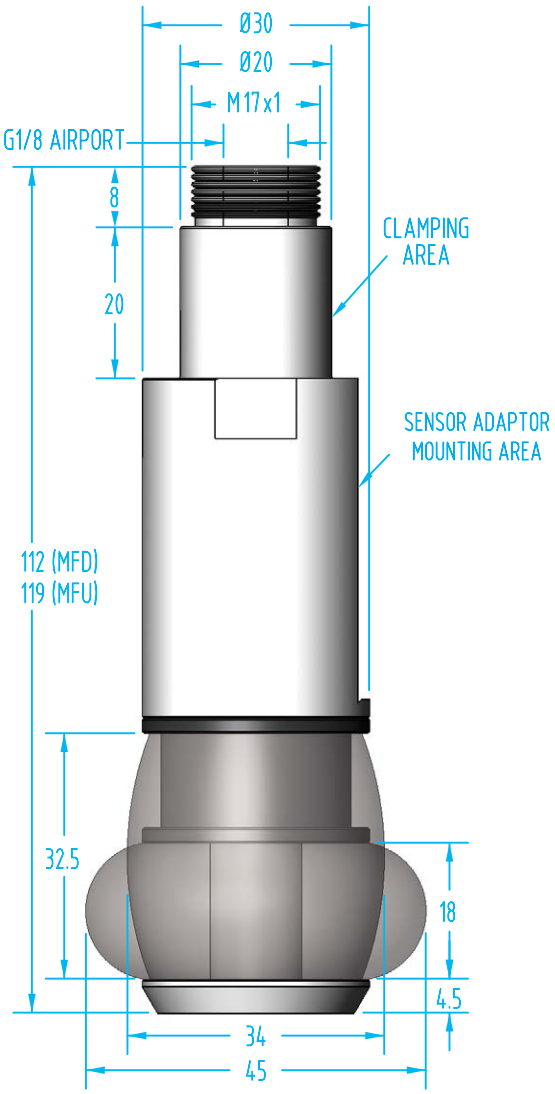

34–45 mm
MFD/MFU 33…

Expansion Grippers

(Dimensioned drawings shown full scale)

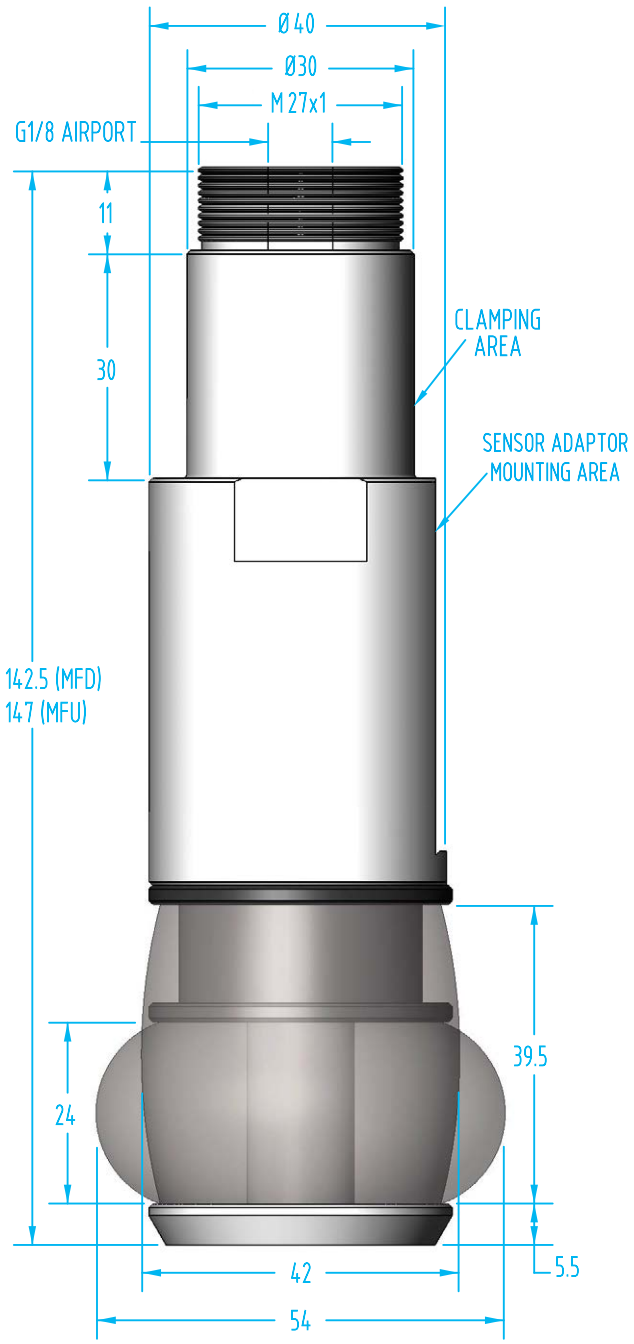

42–54 mm
MFD/MFU 41…

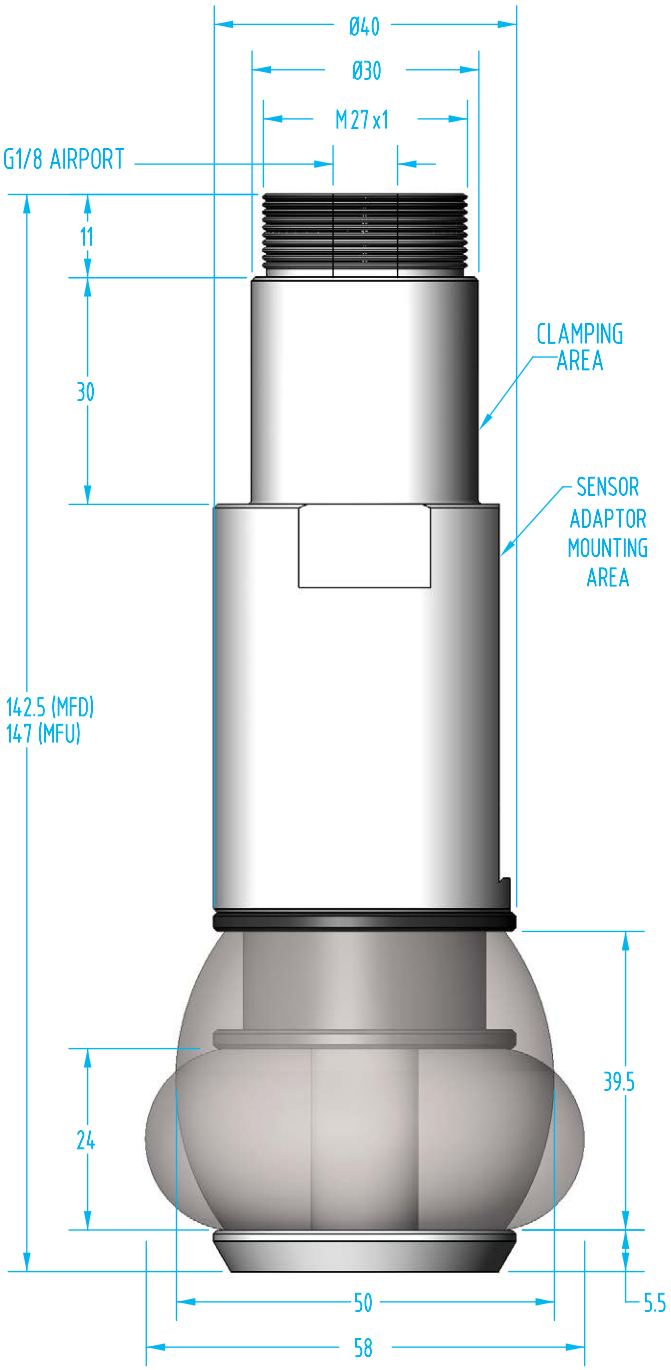

42–54 mm
MFD/MFU 47…

Expansion Grippers

See page 450 for pricing.

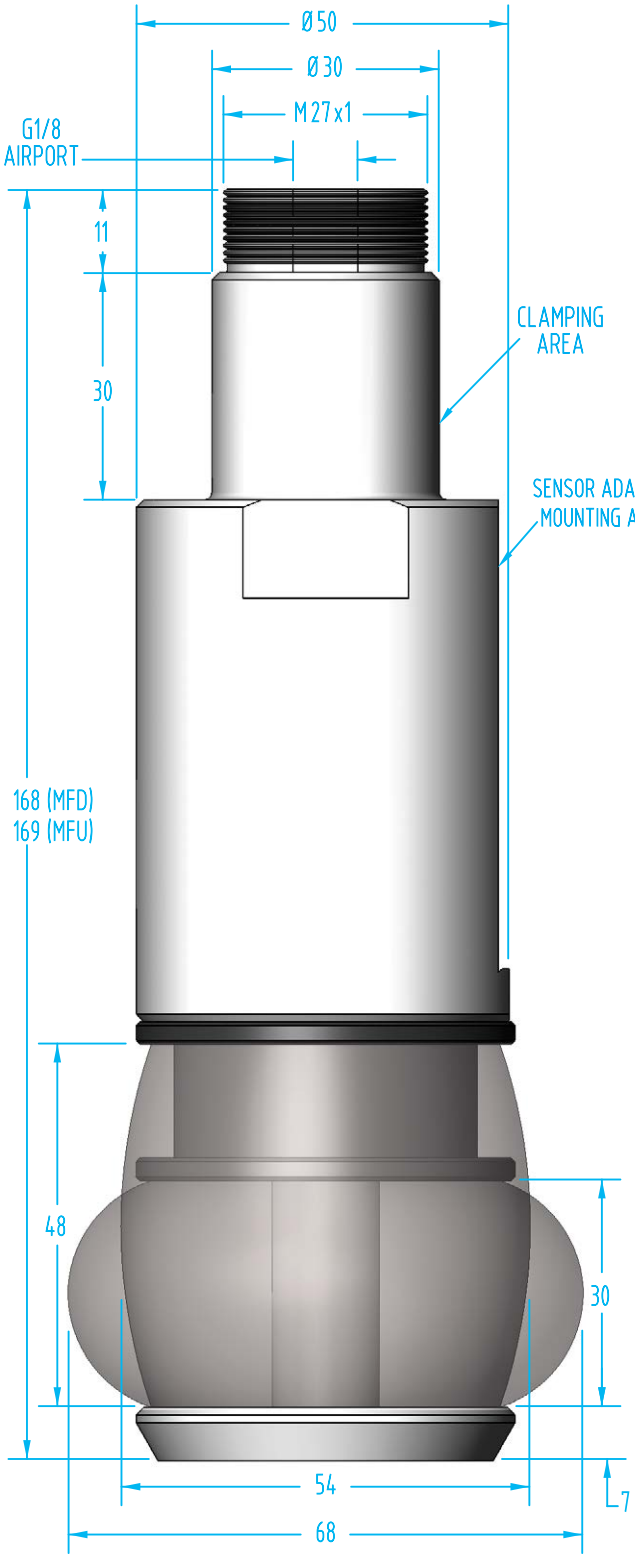

54–68 mm
MFD/MFU 51…

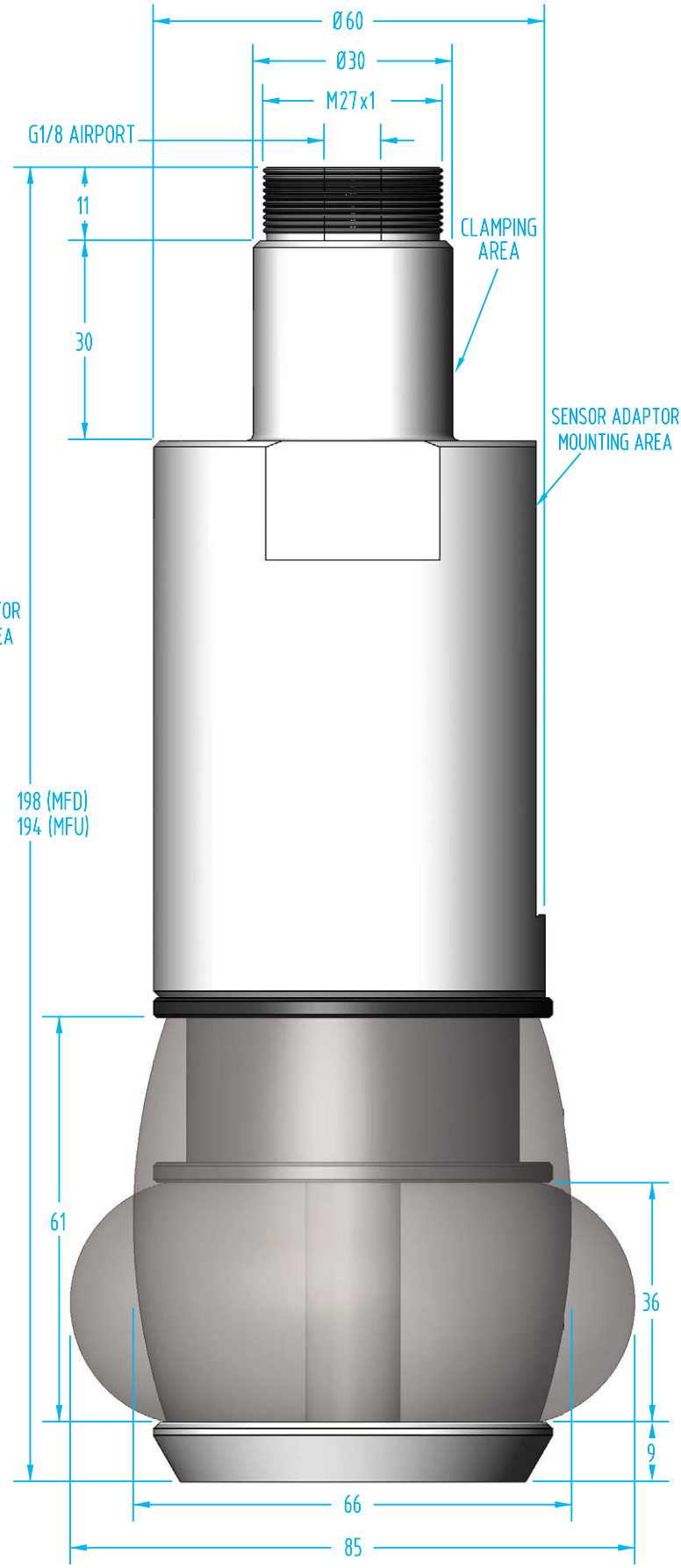

66–85 mm
MFD/MFU 63…

Expansion Grippers

Gripping Force

The force output of an MF gripper depends on several variables—the diameter of the picked object, the surface finishing, friction, and air pressure.

The graphs show the extraction force (F) on the gripped object as a function of its diameter (d).

Aluminum rings, with roughness Ra=0.8, have been used

for the measurements and the grippers supplied with 87 psi compressed air.

EPDM
Silicone

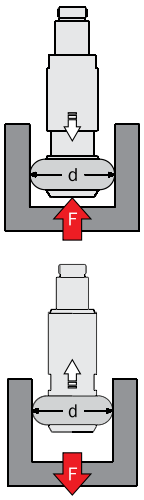

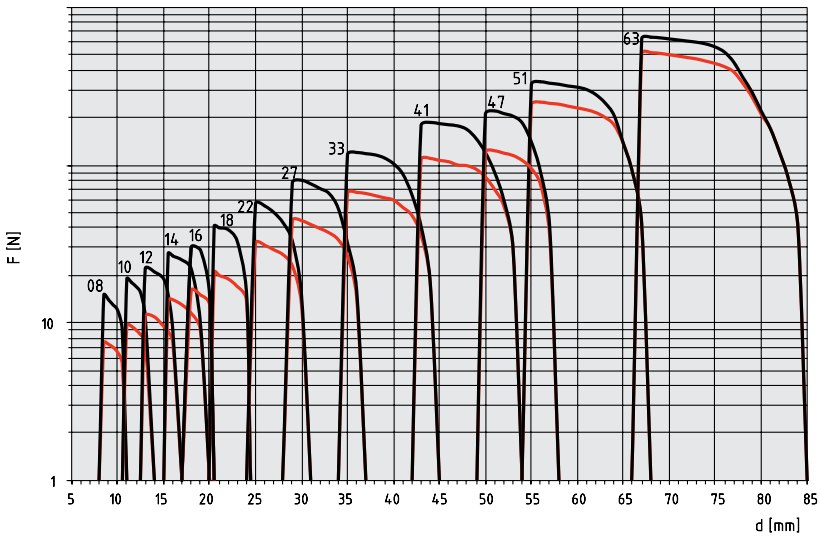

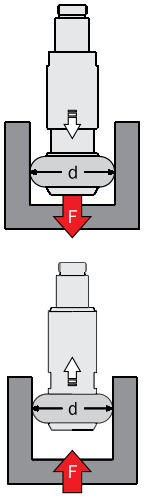

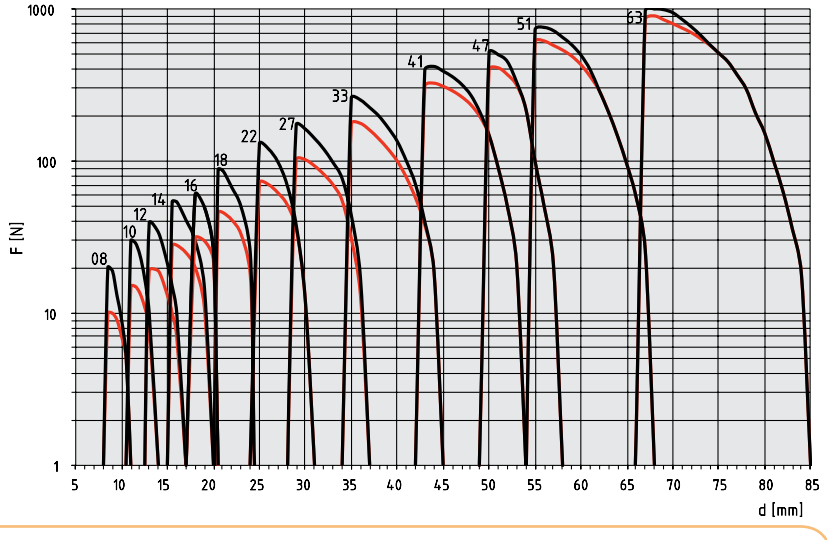

Reference:
Force: N x 0.225 = lbf
Pressure: bar x 14.5 = psi
See also: Sec. 19. Engineering Design Reference

Application Examples

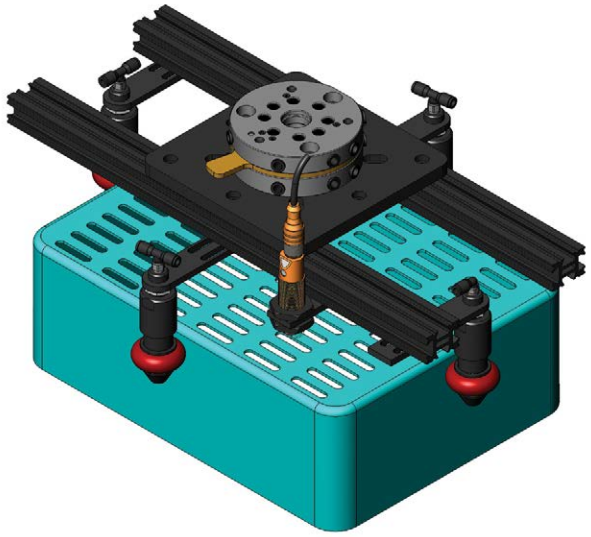

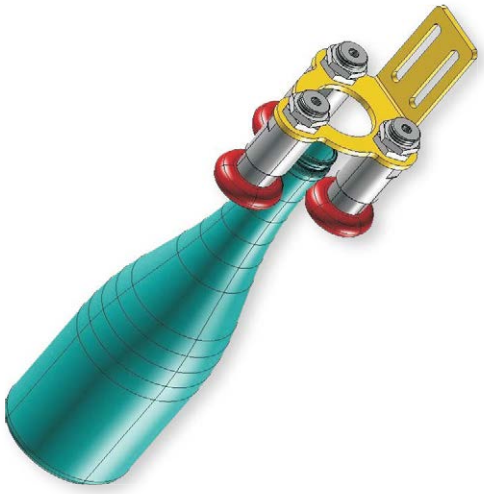

MFD Pricing

Part#	Quick#	Price	Material	Max Temp	Port Style	Action	Min. Ø	Max. Ø	Weight	PSI Range
MFD08E02CL	6875	$101.00	EPDM	284°F	Standard (top)	Down	8mm	11mm	15g	58–116psi
MFD08S01CL	6876	$103.00	Silicone	392°F						
MFD08E02HL	6877	$114.00	EPDM	284°F	Leak Test (side)					
MFD08S01HL	6878	$120.00	Silicone	392°F						
MFD10E02CL	6879	$101.00	EPDM	284°F	Standard (top)	Down	10.5mm	14mm	16g	58–116psi
MFD10S01CL	6880	$103.00	Silicone	392°F						
MFD10E02HL	6881	$120.00	EPDM	284°F	Leak Test (side)					
MFD10S01HL	6882	$120.00	Silicone	392°F						
MFD12E02CL	6883	$95.00	EPDM	284°F	Standard (top)	Down	13mm	17mm	17g	58–116psi
MFD12S01CL	6884	$96.00	Silicone	392°F						
MFD12E02HL	6885	$120.00	EPDM	284°F	Leak Test (side)					
MFD12S01HL	6886	$114.00	Silicone	392°F						
MFD14E02CL	6887	$95.00	EPDM	284°F	Standard (top)	Down	15mm	19.5mm	17g	58–116psi
MFD14S01CL	6888	$96.00	Silicone	392°F						
MFD14E02HL	6889	$114.00	EPDM	284°F	Leak Test (side)					
MFD14S01HL	6890	$115.00	Silicone	392°F						
MFD16E02CL	7221	$121.00	EPDM	284°F	Standard (top)	Down	18mm	21.5mm	17g	58–116psi
MFD16S01CL	7222	$122.00	Silicone	392°F						
MFD16E02HL	7223	$126.00	EPDM	284°F	Leak Test (side)					
MFD16S01HL	7224	$128.00	Silicone	392°F						
MFD18E02CL	6891	$123.00	EPDM	284°F	Standard (top)	Down	19.5mm	25mm	28g	58–116psi
MFD18S01CL	6892	$124.00	Silicone	392°F						
MFD18E02HL	6893	$117.00	EPDM	284°F	Leak Test (side)					
MFD18S01HL	6894	$128.00	Silicone	392°F						
MFD22E02CL	6895	$125.00	EPDM	284°F	Standard (top)	Down	24mm	31.5mm	43g	58–116psi
MFD22S01CL	6896	$127.00	Silicone	392°F						
MFD22E02HL	6897	$129.00	EPDM	284°F	Leak Test (side)					
MFD22S01HL	6898	$130.00	Silicone	392°F						

The MFD has a **downward motion** that compresses the expander. The OAL is unchanged.

MFD

MFD Compressed

MFD…CL
(top port, standard)

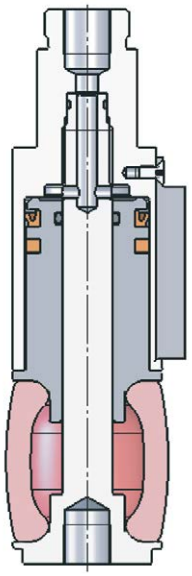

MFD…HL
(side port, leak test)

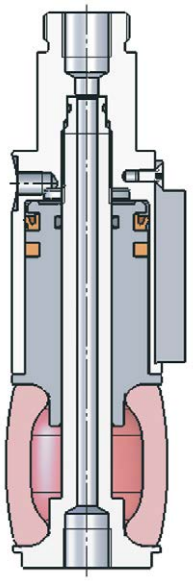

Fittings Available on page 935

MFD Pricing

Part#	Quick#	Price	Material	Max Temp	Port Style	Action	Min. Ø	Max. Ø	Weight	PSI Range
MFD27E02CL	6899	$129.00	EPDM	284°F	Standard (top)	Down	28mm	37mm	79g	58–116psi
MFD27S01CL	6900	$130.00	Silicone	392°F						
MFD27E02HL	6901	$132.00	EPDM	284°F	Leak Test (side)					
MFD27S01HL	6902	$134.00	Silicone	392°F						
MFD33E02CL	6903	$148.00	EPDM	284°F	Standard (top)	Down	34mm	45mm	118g	58–116psi
MFD33S01CL	6904	$149.00	Silicone	392°F						
MFD33E02HL	6905	$135.00	EPDM	284°F	Leak Test (side)					
MFD33S01HL	6906	$150.00	Silicone	392°F						
MFD41E02CL	6907	$177.00	EPDM	284°F	Standard (top)	Down	42mm	54mm	280g	58–116psi
MFD41S01CL	6908	$182.00	Silicone	392°F						
MFD41E02HL	6909	$152.00	EPDM	284°F	Leak Test (side)					
MFD41S01HL	6910	$192.00	Silicone	392°F						
MFD47E02CL	7225	$202.00	EPDM	284°F	Standard (top)	Down	50mm	58mm	280g	58–116psi
MFD47S01CL	7226	$208.00	Silicone	392°F						
MFD47E02HL	7227	$214.00	EPDM	284°F	Leak Test (side)					
MFD47S01HL	7228	$220.00	Silicone	392°F						
MFD51E02CL	6911	$222.00	EPDM	284°F	Standard (top)	Down	54mm	68mm	490g	58–116psi
MFD51S01CL	6912	$231.00	Silicone	392°F						
MFD51E02HL	6913	$197.00	EPDM	284°F	Leak Test (side)					
MFD51S01HL	6914	$233.00	Silicone	392°F						
MFD63E02CL	6915	$296.00	EPDM	284°F	Standard (top)	Down	66mm	85mm	800g	58–116psi
MFD63S01CL	6916	$282.00	Silicone	392°F						
MFD63E02HL	6917	$242.00	EPDM	284°F	Leak Test (side)					
MFD63S01HL	6918	$274.00	Silicone	392°F						

Application Examples: (Leak Test, Side-Ported MFD…HL's)

The ...HL models have a central thru-hole. It can be used to blow compressed air, or provide vacuum, with the purpose to cool a part or check for leakage.

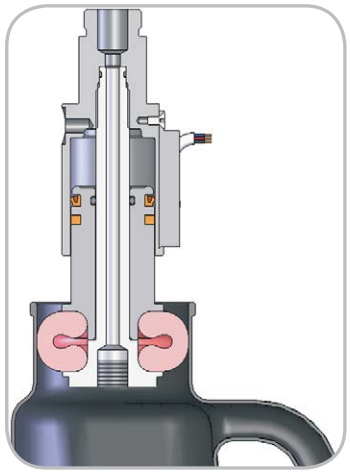

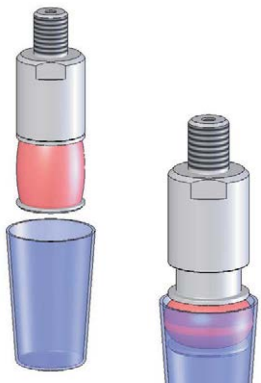

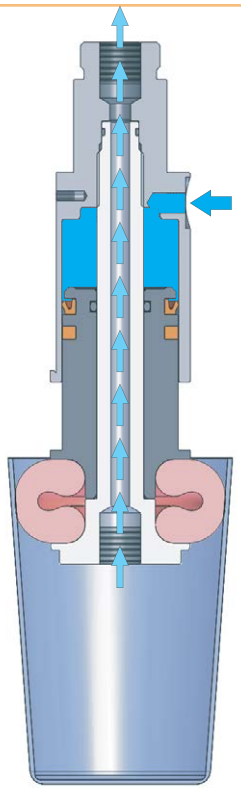

MFU Pricing

Part#	Quick#	Price	Material	Max. Temp.	Side Port	Port Style	Action	Min. Ø	Max. Ø	Wt	PSI Range
MFU08E02CL	6831	$167.00	EPDM	284°F	–	Standard (top)	Up	8mm	11mm	16g	58–116psi
MFU08S01CL	6832	$168.00	Silicone	392°F							
MFU08E02HL	6833	$173.00	EPDM	284°F	M3	Leak Test (side)					
MFU08S01HL	6834	$174.00	Silicone	392°F							
MFU10E02CL	6835	$167.00	EPDM	284°F	–	Standard (top)	Up	10.5mm	14mm	17g	58–116psi
MFU10S01CL	6836	$168.00	Silicone	392°F							
MFU10E02HL	6837	$173.00	EPDM	284°F	M3	Leak Test (side)					
MFU10S01HL	6838	$174.00	Silicone	392°F							
MFU12E02CL	6839	$163.00	EPDM	284°F	–	Standard (top)	Up	13mm	17mm	18g	58–116psi
MFU12S01CL	6840	$164.00	Silicone	392°F							
MFU12E02HL	6841	$165.00	EPDM	284°F	M3	Leak Test (side)					
MFU12S01HL	6842	$167.00	Silicone	392°F							
MFU14E02CL	6843	$164.00	EPDM	284°F	–	Standard (top)	Up	15mm	19.5mm	20g	58–116psi
MFU14S01CL	6844	$165.00	Silicone	392°F							
MFU14E02HL	6845	$168.00	EPDM	284°F	M3	Leak Test (side)					
MFU14S01HL	6846	$169.00	Silicone	392°F							
MFU16E02CL	7229	$170.00	EPDM	284°F	–	Standard (top)	Up	18mm	21.5mm	20g	58–116psi
MFU16S01CL	7230	$171.00	Silicone	392°F							
MFU16E02HL	7231	$172.00	EPDM	284°F	M3	Leak Test (side)					
MFU16S01HL	7232	$173.00	Silicone	392°F							
MFU18E02CL	6847	$174.00	EPDM	284°F	–	Standard (top)	Up	19.5mm	25mm	35g	58–116psi
MFU18S01CL	6848	$175.00	Silicone	392°F							
MFU18E02HL	6849	$178.00	EPDM	284°F	M5	Leak Test (side)					
MFU18S01HL	6850	$179.00	Silicone	392°F							
MFU22E02CL	6851	$189.00	EPDM	284°F	–	Standard (top)	Up	24mm	31.5mm	50g	58–116psi
MFU22S01CL	6852	$190.00	Silicone	392°F							
MFU22E02HL	6853	$200.00	EPDM	284°F	M5	Leak Test (side)					
MFU22S01HL	6854	$202.00	Silicone	392°F							

The MFU has an **upward motion** that compresses the expander. THE OAL is reduced.

MFU

MFU Compressed

MFU…CL
(top port, standard)

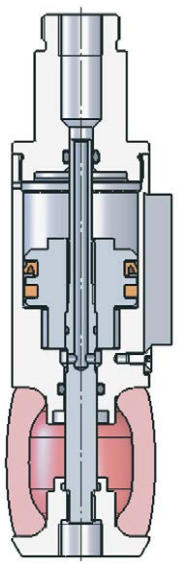

MFU…HL
(side port, leak test)

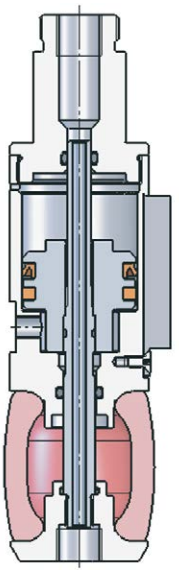

MFU Pricing

Part#	Quick#	Price	Material	Max. Temp.	Side Port	Port Style	Action	Min. Ø	Max. Ø	Wt	PSI Range
MFU27E02CL	6855	$209.00	EPDM	284°F	–	Standard (top)	Up	28mm	37mm	100g	58–116psi
MFU27S01CL	6856	$211.00	Silicone	392°F							
MFU27E02HL	6857	$211.00	EPDM	284°F	M5	Leak Test (side)					
MFU27S01HL	6858	$211.00	Silicone	392°F							
MFU33E02CL	6859	$219.00	EPDM	284°F	–	Standard (top)	Up	34mm	45mm	130g	58–116psi
MFU33S01CL	6860	$222.00	Silicone	392°F							
MFU33E02HL	6861	$223.00	EPDM	284°F	M5	Leak Test (side)					
MFU33S01HL	6862	$226.00	Silicone	392°F							
MFU41E02CL	6863	$242.00	EPDM	284°F	–	Standard (top)	Up	42mm	54mm	300g	58–116psi
MFU41S01CL	6864	$246.00	Silicone	392°F							
MFU41E02HL	6865	$246.00	EPDM	284°F	M5	Leak Test (side)					
MFU41S01HL	6866	$249.00	Silicone	392°F							
MFU47E02CL	7233	$252.00	EPDM	284°F	–	Standard (top)	Up	50mm	58mm	300g	58–116psi
MFU47S01CL	7234	$255.00	Silicone	392°F							
MFU47E02HL	7235	$258.00	EPDM	284°F	M5	Leak Test (side)					
MFU47S01HL	7236	$261.00	Silicone	392°F							
MFU51E02CL	6867	$263.00	EPDM	284°F	–	Standard (top)	Up	54mm	68mm	500g	58–116psi
MFU51S01CL	6868	$272.00	Silicone	392°F							
MFU51E02HL	6869	$271.00	EPDM	284°F	G1/8"	Leak Test (side)					
MFU51S01HL	6870	$278.00	Silicone	392°F							
MFU63E02CL	6871	$302.00	EPDM	284°F	–	Standard (top)	Up	66mm	85mm	785g	58–116psi
MFU63S01CL	6872	$312.00	Silicone	392°F							
MFU63E02HL	6873	$306.00	EPDM	284°F	G1/8"	Leak Test (side)					
MFU63S01HL	6874	$316.00	Silicone	392°F							

Application Examples: (Standard, Top-Ported MFD…CL's)

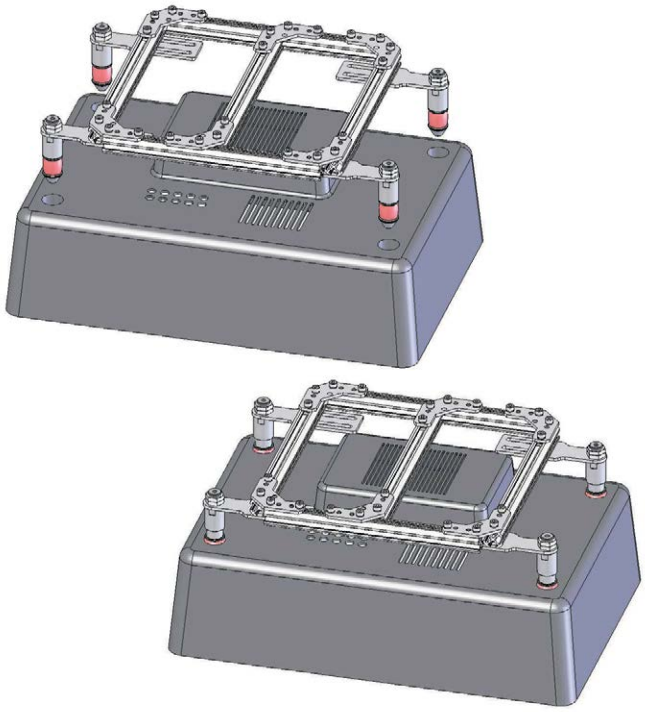

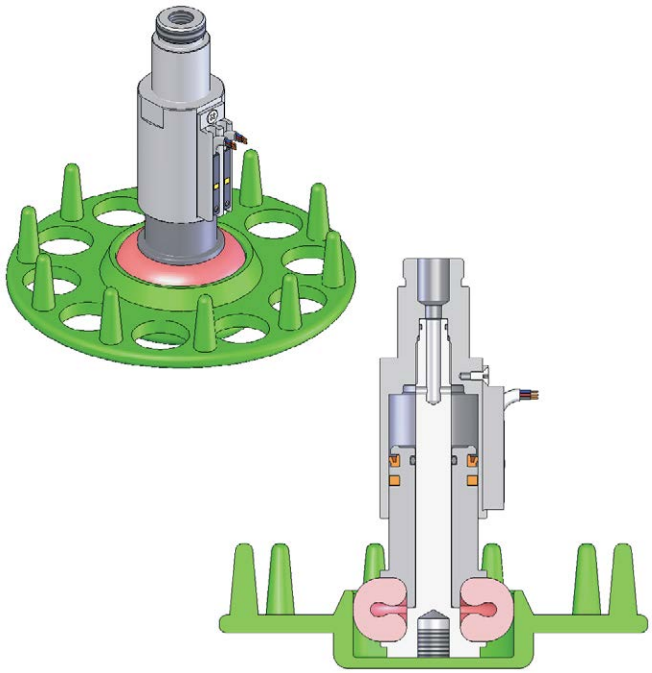

Expansion Gripper Nose Cones & Sensors

Centering Cones

Centering cones in nylon with a stainless screw are available as an option.
For sizes larger than 33, they are also provided with a thru-hole.

Nose Cone Dimensions

Quick#	Part#	Wt.	ØAD	ØAE	AG	MFD MFU	Price
6929	MFC10	0.5g	7.8	-	2.9	Ø10	$2.51
6930	MFC12	1g	10	-	3.5	Ø12	$2.51
6931	MFC14	1g	11.8	-	4.5	Ø14 / Ø16	$2.51
6932	MFC18	1.5g	15.5	-	6.5	Ø18	$2.51
6933	MFC22	2g	18.8	-	8	Ø22	$3.13
6934	MFC27	5g	21.3	-	9.5	Ø27	$3.13
6935	MFC33	7g	28	4	12	Ø33	$3.76
6936	MFC41	12g	37	4	19	Ø41 / Ø47	$4.39
6937	MFC51	21g	47	4	26	Ø51	$5.01
6938	MFC63	30g	56	4	30	Ø63	$5.01

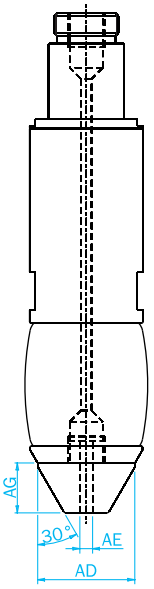

Fittings Available on page 935

Sensors for Expansion Grippers

In the larger sizes a magnet is integrated in the piston. An optional housing for SN series sensors is available. One or two sensors can be fitted on a gripper.

Quick#	Part#	Type	Connection	Price
6278	SN4N225G	PNP	2.5m Lead	$26.14
6357	SN4M225G	NPN	2.5m Lead	$26.14
6277	SN3N203G	PNP	.3m lead & M8 Connector	$29.96
6356	SN3M203G	NPN	.3m lead & M8 Connector	$29.96

Note: Sensors can be used on sizes 27 or larger only.

Sensor Brackets

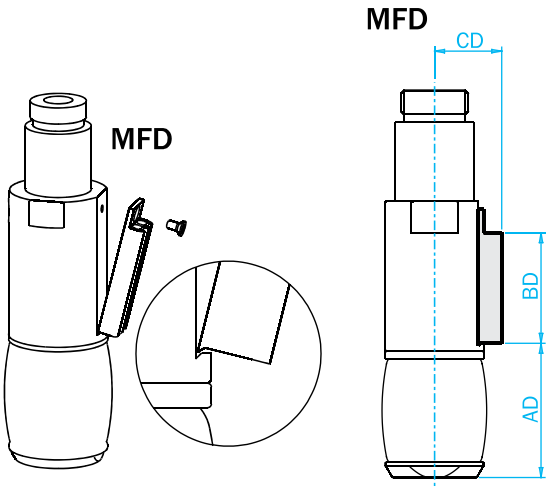

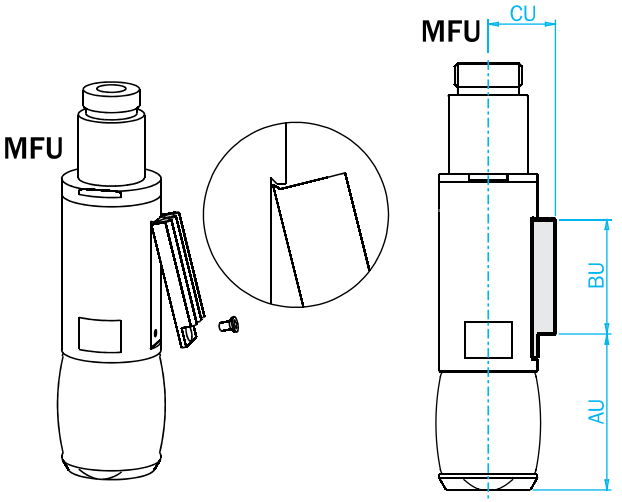

Quick#	Part#	Wt.	AD	BD	CD	MFD	Price
6919	MFD27K	4g	34	28	17	Ø27	$16.29
6920	MFD33K	5g	41.5	34.5	19.7	Ø33	$17.54
6921	MFD41K	5g	52	40.5	23.8	Ø41 / Ø47	$15.04
6922	MFD51K	6g	65	49	28.5	Ø51	$15.04
6923	MFD63K	7g	85.5	54.5	33.5	Ø63	$16.29

Quick#	Part#	Wt.	AU	BU	CU	MFU	Price
6924	MFU27K	4g	39.5	29	17	Ø27	$15.04
6925	MFU33K	5g	46.5	33	19.7	Ø33	$15.04
6926	MFU41K	5g	55.5	36.5	23.8	Ø41 / Ø47	$15.04
6927	MFU51K	6g	71.5	39	28.5	Ø51	$15.04
6928	MFU63K	7g	87.5	45	33.5	Ø63	$15.04

Replacement Expander

Maintenance

No periodic maintenance is necessary. The expander can be replaced when worn. The expected medium life time of the EPDM expander is about 500,000 cycles while silicone is about 1 million cycles.

The expander can be cut (direction showed in the photo) to remove it from the gripper body. It is not necessary to dismantle the gripper to mount the new expander. It must not be glued nor greased.

Quick #	Part #	Size	Style	Material	Price
5377	IF08E02	8mm	MFD/MFU	EPDM	$6.30
5378	IF08S01	8mm	MFD/MFU	Silicone	$7.50
5379	IF10E02	10mm	MFD/MFU	EPDM	$6.30
5380	IF10S01	10mm	MFD/MFU	Silicone	$7.50
5381	IF12E02	12mm	MFD/MFU	EPDM	$8.80
5382	IF12S01	12mm	MFD/MFU	Silicone	$10.00
5383	IF14E02	14mm	MFD/MFU	EPDM	$8.80
5384	IF14S01	14mm	MFD/MFU	Silicone	$10.00
7304	IF16E02	16mm	MFD/MFU	EPDM	$12.50
7305	IF16S01	16mm	MFD/MFU	Silicone	$12.50
5385	IF18E02	18mm	MFD/MFU	EPDM	$11.30
5386	IF18S01	18mm	MFD/MFU	Silicone	$12.50
5387	IF22E02	22mm	MFD/MFU	EPDM	$12.50
5388	IF22S01	22mm	MFD/MFU	Silicone	$13.80
5389	IF27E02	27mm	MFD/MFU	EPDM	$13.80
5390	IF27S01	27mm	MFD/MFU	Silicone	$15.00
5391	IF33E02	33mm	MFD/MFU	EPDM	$15.00
5392	IF33S01	33mm	MFD/MFU	Silicone	$16.30
5393	IF41E02	41mm	MFD/MFU	EPDM	$18.80
5394	IF41S01	41mm	MFD/MFU	Silicone	$21.30
7347	IF47E02	47mm	MFD/MFU	EPDM	$20.57
7348	IF47S01	47mm	MFD/MFU	Silicone	$22.39
5395	IF51E02	51mm	MFD/MFU	EPDM	$23.80
5396	IF51S01	51mm	MFD/MFU	Silicone	$25.10
5397	IF63E02	63mm	MFD/MFU	EPDM	$28.80
5398	IF63S01	63mm	MFD/MFU	Silicone	$30.10

Mounting Adaptors

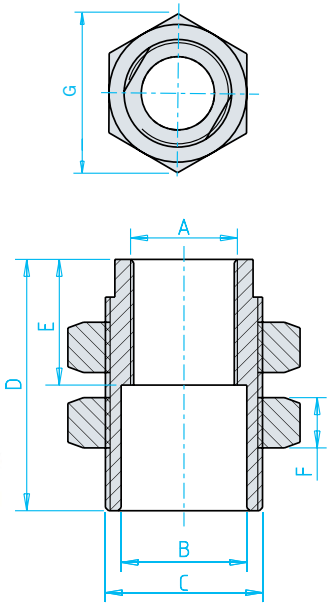

	AF12F16M	AF17F25M	AF27F33M
Quick#	6983	6984	6985
A	M12x1	M17x1	M27x1
B	Ø14	Ø20	Ø30
C	M16x1	M25x1.5	M33x1.5
D	25	40	45
E	11	20	15
F	5	8	6.4
G	21	37	47
Weight	25g	130g	140g
Price	$20.05	$28.82	$53.88
Fits Grippers	MFD/MFU08... – MFD/MFU22...	MFD/MFU27... – MFD/MFU33...	MFD/MFU41... – MFD/MFU63...

ID Gripping Air Hands

Inflating Air Hands for ID Gripping

Non-marring Air Hands provide an alternative to vacuum pads and grippers. Air Hands gently grip the inside diameter of a part by using its inflating neoprene rubber or silicone bladder. The Air Hand conforms to the injection molded part's diameter, unlike using grippers that require custom made fingers. And because the Air Hand conforms to the entire ID of the part, less pressure is required to grip and hold the part, thereby reducing chance of deforming or damaging your part.

The Air Hands' maximum inflating pressures are low and therefore require a regulator to be used. Also, because of the neoprene rubber and silicone materials, it is recommended that dry air is used.

1. Deflated Air Hand fits inside the part.

2. The bladder inflates, gently conforming to the shape of the part.

3. Surface pressure from the inflated bladder provides a steady, uniform grip force over the entire interior diameter of the part.

Life Expectancy

Life expectancy for the neoprene style may be 250,000 to 500,000 cycles. Life expectancy for the silicone style is closer to 100,000 cycles.

A critical variable affecting life expectancy is the presence of abrasion and sharp edges of a molded part i.e.; the smoother the finish, the longer the life. For these reasons, the actual life cycle may exceed or fall short of these published figures depending on a particular application.

Life expectancy is similar or slightly longer for the OD style as compared to the ID style.

- Smaller Air Hands are very lightweight and can be used effectively in multi-cavity molds.
- Larger Air Hands, when used in multi-cavity molds, can significantly affect the overall EOAT weight.
- The amount of inflation and grip force can be adjusted as needed with the use of a pressure regulator (See page 910)
- Choose silicone when high-temperature and non-marking is most important, Neoprene when part temperature is lower and long-life is most important.
- To prolong use, dry air is recommended.
- Call our EOAT engineering department for specific design assistance.

ID Gripping Air Hands

Models: #1300–1302

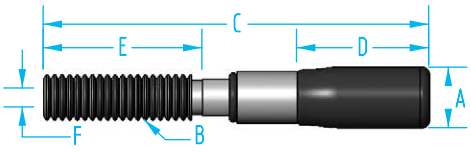

Air Hands Dimensions

Quick#	Part Range ØID	ØA (Deflated)	B	C	D	E	F	G	H	I
1300	8.5–10	8	M6	51	17.5	21	M3	-	-	-
1301	10–12	9.5	M6	51	17.5	21	M3	-	-	-
1302	12–17	11	M8	51	17.5	21	M5	-	-	-
1303	16–21	14	10	52	21	22	M5	12	M5	8–32
1304	21–27	19	14	56	22	22	M5	12	M5	10–24
1305	24–32	22	17	56	22	22	M5	12	M5	10–24
1306	28–36	25	19	55	22	22	M5	12	M5	10–24
1307	30–44	27	22	64	28	25	M5	14	M5	10–24
1308	32–52	29	25	75	34	30	M5	15	M5	1/4–20
1309	45–65	41	34	71	42	17.5	M6	-	PT 1/8 (R1/8)	1/4–20
1310	58–85	51	44	90	52	26	M6	18	M6*	1/4–20
1311	70–105	63	54	101	53	35	M6	20	M6*	1/4–20
1312	21–27†	19	14	56	22	22	M5	12	M5	10–24
1313	24–32	22	17	56	22	22	M5	12	M5	10–24
1314	28–36	25	19	55	22	22	M5	12	M5	10–24
1315	30–44	27	22	64	28	25	M5	14	M5	10–24
1316	32–52	29	25	75	34	30	M5	15	M5	1/4–20
1318	45–65	41	34	71	42	17.5	M6	-	PT 1/8 (R1/8)	1/4–20

†*Note: If you need small diameter silicone Air Hands, order a slightly undersized neoprene style, and fit the silicone surgical tubing over it.*

Models: #1303–1318

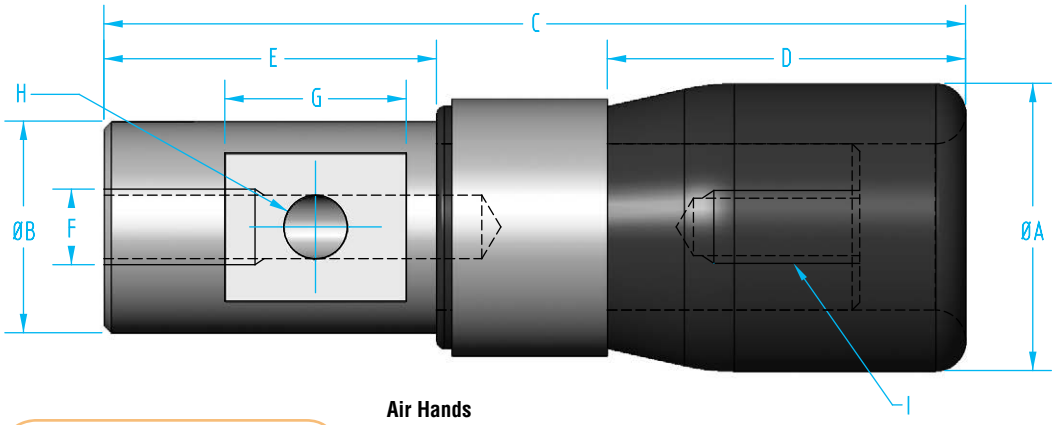

Air Hands

Quick#	Part#	Price	Material	Part Range ØID	ØA (Deflated)	Maximum Restricted Pressure	Maximum Unrestricted Pressure	Wt.
1300	GSG-IAH-10N	$318.76	Neoprene (up to 165°F)	8.5–10	8	**55psi**	**25psi**	8g
1301	GSG-IAH-12N	$308.96		10–12	9.5	**55psi**	**25psi**	12g
1302	GSG-IAH-17N	$297.82		12–17	11	**55psi**	**25psi**	17g
1303	GSG-IAH-21N	$139.96		16–21	14	**55psi**	**25psi**	28g
1304	GSG-IAH-27N	$153.58		21–27	19	70psi	35psi	60g
1305	GSG-IAH-32N	$161.28		24–32	22	70psi	35psi	85g
1306	GSG-IAH-36N	$171.10		28–36	25	70psi	35psi	105g
1307	GSG-IAH-44N	$186.24		30–44	27	70psi	35psi	160g
1308	GSG-IAH-52N	$210.74		32–52	29	70psi	35psi	245g
1309	GSG-IAH-65N	$420.46		45–65	41	70psi	35psi	180g
1310	GSG-IAH-85N	$473.18		58–85	51	70psi	35psi	370g
1311	GSG-IAH-105N	$508.80		70–105	63	70psi	35psi	610g
1312	GSG-IAH-25S†	$213.94	Silicone (up to 320°F)	21–27	19	**25psi**	**15psi**	60g
1313	GSG-IAH-30S	$228.36		24–32	22	**25psi**	**15psi**	85g
1314	GSG-IAH-35S	$252.70		28–36	25	**25psi**	**15psi**	105g
1315	GSG-IAH-40S	$281.82		30–44	27	**25psi**	**15psi**	160g
1316	GSG-IAH-42S	$322.92		32–52	29	**25psi**	**15psi**	245g
1318	GSG-IAH-58S	$450.76		45–65	41	**25psi**	**15psi**	180g

Fittings Available on page 459

See page 910 for pressure regulators

OD Gripping Air Hands

These OD gripping Air Hands operate on the same principal as the ID style on the previous page, except they grip on a part's outside diameter. Because of the unique gripping method of these OD Air Hands, relatively large parts and sprues can be firmly gripped and stabilized. Call our EOAT engineering department for design assistance for your particular application.

The Air Hands' maximum inflating pressures are low and therefore require a regulator to be used. (See page 911). Also, because of the neoprene rubber and silicone materials, it is recommended that dry air is used. Life expectancy is similar for the OD style as compared to the ID style.

1. Deflated Air Hand fits over the outside diameter of the part.

2. The bladder inflates, gently conforming to the shape of the part.

3. Surface pressure from the fully inflated bladder provides a steady, uniform grip force over the entire exterior diameter of the part.

O.D. Air Hands

Quick#	Part#	Price	Material	Part Range Ø ID	ØA (Deflated)	B	C	D	E	F	G	Maximum Restricted Pressure	Maximum Unrestricted Pressure	Wt.
1319	GSG-OAH-15N	$428.48	Neoprene (up to 165°F)	5–15	19	33	40	36	10	M5	M5	20psi	10psi	60g
1320	GSG-OAH-25N	$487.58		10–25	27	48	60	48	13	M6	M6*	20psi	10psi	145g
1321	GSG-OAH-35N	$533.30		15–35	37	58	70	52	14	M6	M6*	20psi	10psi	210g
1322	GSG-OAH-45N	$571.16		20–45	48	69	80	56	15	M8	R1/8"	20psi	10psi	285g
1323	GSG-OAH-15S	$602.50	Silicone (up to 320°F)	5–15	19	33	40	36	10	M5	M5	**15psi**	**7.5psi**	60g
1324	GSG-OAH-25S	$655.94		10–25	27	48	60	48	13	M6	M6*	**15psi**	**7.5psi**	145g
1325	GSG-OAH-35S	$709.28		15–35	37	58	70	52	14	M6	M6*	**15psi**	**7.5psi**	210g
1326	GSG-OAH-45S	$762.72		20–45	48	69	80	56	15	M8	R1/8"	**15psi**	**7.5psi**	285g

** NOTE: Hard to find M6 fittings available on page 459*

When ordering, use Quick#s to ensure order accuracy.

See page 910 for Pressure Regulators

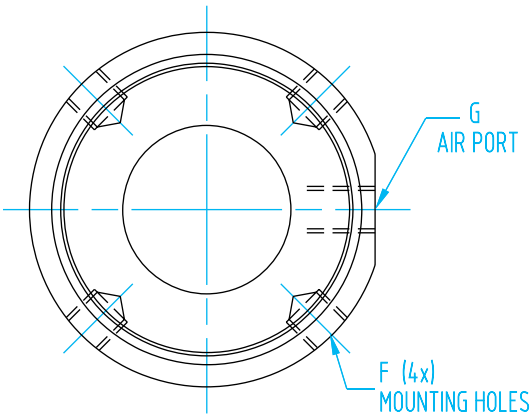

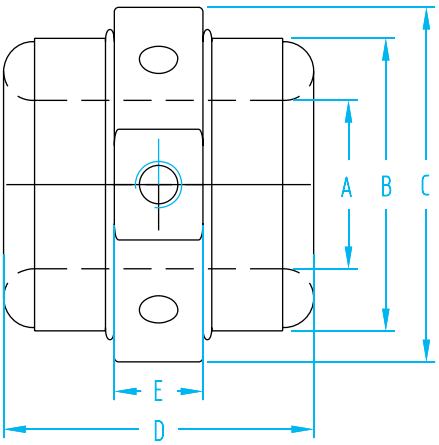

Air Hand Mounting Brackets

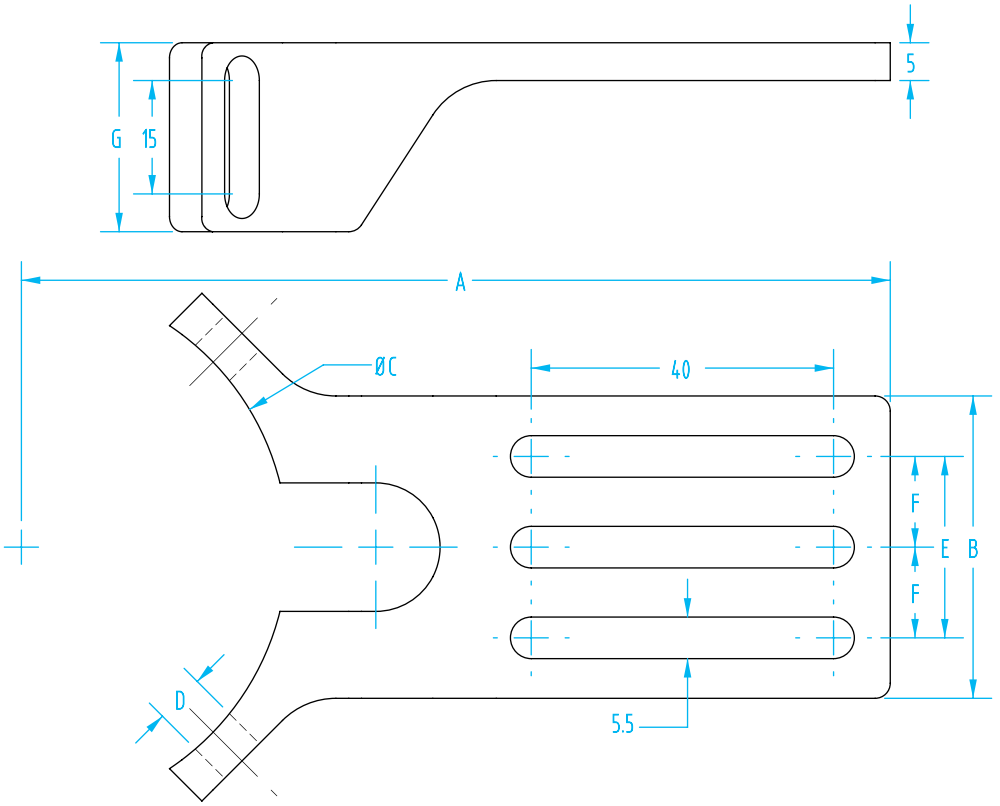

Mounting Brackets for Air Hands

Quick#	Part#	Price	Use with	A	B	C	D	E	F	G	Wt.
1739*	GSC-OAH-15MB	$39.45	OAH-15	100	25	40	5.5	12.5	-	25	31g
1740*	GSC-OAH-25MB	$39.45	OAH-25	110	30	60	6.5	12.5	-	25	46g
1741	GSC-OAH-35MB	$39.87	OAH-35	115	40	70	6.5	-	12.5	25	57g
1742	GSC-OAH-45MB	$44.75	OAH-45	120	40	80	8.5	-	12.5	30	69g

Order profile mounting fasteners separately 2@ M5x10, slotted nut, & washer, page 966.
**Use M5 slotted nut (Q#4951) to fasten brackets #1739 & #1740 to Gimatic & ASS profile found on page 969.*

Male Threaded Push-In Elbow Fitting

Quick#	Part#	Thread	øD	Price
117	GSF-QME-M304	M3	4	$4.90
118	GSF-QME-M504	M5	4	$3.30
1857	GSF-QME-M604	M6	4	$11.10
2004	GSF-QME-R804	R1/8	4	$4.50
Straight Fittings				
1856	GSF-QMC-M604	M6	4	$5.35

Application Examples

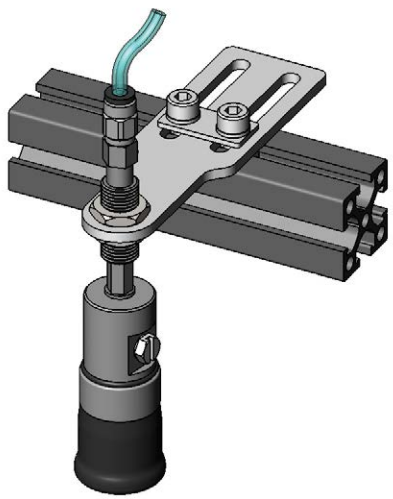

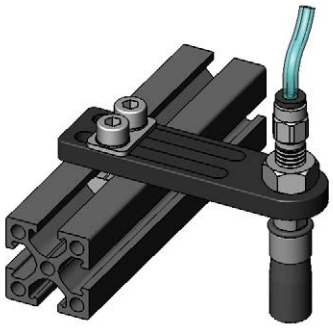

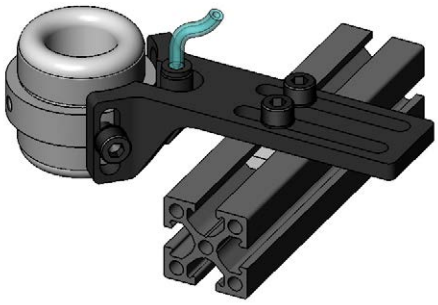

Air Hand Accessories

Air Hand Protection Sleeves

Quick#	Part#	Price (per Pkg.)	Quantity (in Pkg.)	Description	Sleeve Material	T (mm)	D (mm)	L (mm)
1923	GSG-IAH-27NS†	$17.48	1	Fits #1304: IAH-27N (P014TR)	Neoprene	1.3	18	38
1924	GSG-IAH-32NS	$17.48	1	Fits #1305: IAH-32N (P017TR)		1.3	20	38
1925	GSG-IAH-36NS	$17.48	1	Fits #1306: IAH-36N (P019TR)		1.3	23	38
1926	GSG-IAH-44NS	$20.36	1	Fits #1307: IAH-44N (P022TR)		1.3	25	44
1927	GSG-IAH-52NS	$31.76	1	Fits #1308: IAH-52N (P025TR)		2.1	27	54
1928	GSG-IAH-65NS	$37.00	1	Fits #1309: IAH-65N (P035T)		2.1	27	64
1929	GSG-IAH-85NS	$57.34	1	Fits #1310: IAH-85N (P045T)		2.1	37	73
1930	GSG-IAH-105NS	$86.54	1	Fits #1311: IAH-105N (P055T)		2.1	47	79

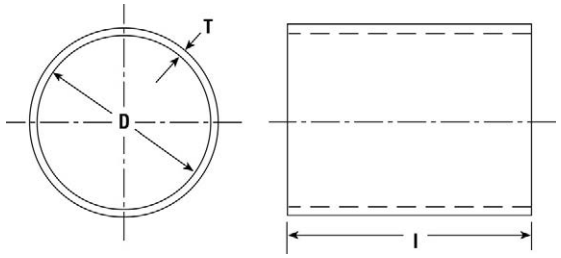

Air Hand Nose Cones

Quick#	Part#	Use with:			Price
5261	GSG-IAH-P010NC	#1303	IAH-21N	P009TR	$30.14
5262	GSG-IAH-P014NC	#1304, #1312	IAH-27N, IAH-25S	P014TR, (/S)	$33.02
5263	GSG-IAH-P017NC	#1305, #1313	IAH-32N, IAH-30S	P017TR, (/S)	$33.02
5264	GSG-IAH-P019NC	#1306, #1314	IAH-36N, IAH-35S	P019TR, (/S)	$33.02
5265	GSG-IAH-P022NC	#1307, #1315	IAH-44N, IAH-40S	P022TR, (/S)	$33.02
5266	GSG-IAH-P025NC	#1308, #1316	IAH-52N, IAH-42S	P025TR, (/S)	$29.56
5267	GSG-IAH-P035NC	#1309, #1318	IAH-65N, IAH-58S	P035T, (/S)	$29.56
5268	GSG-IAH-P045NC	#1310	IAH-85N	P045T	$35.88
5269	GSG-IAH-P055NC	#1311	IAH-105N	P055T	$34.44

When ordering, use Quick#s to ensure order accuracy.

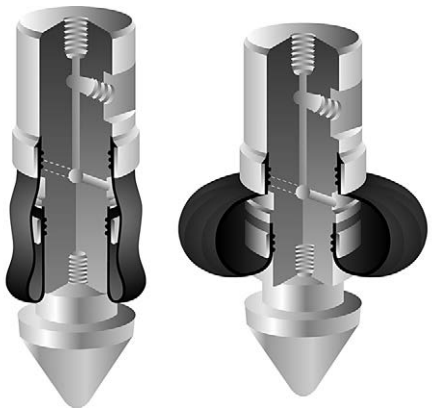

Air Hand Illustrations

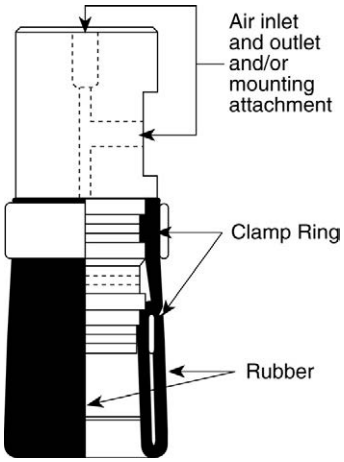

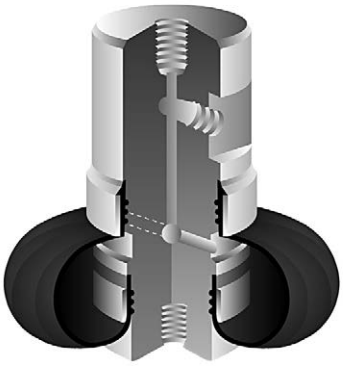

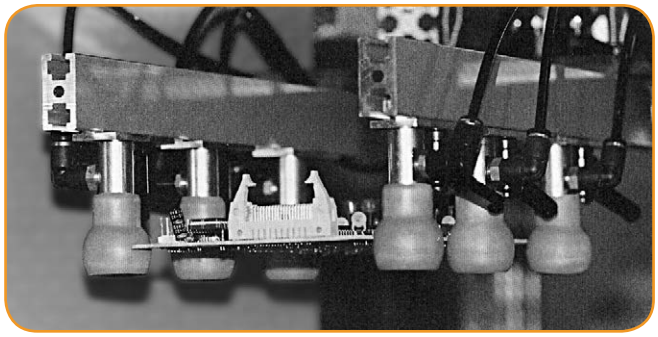

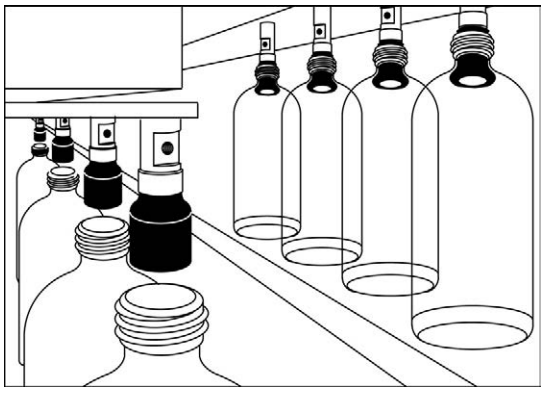

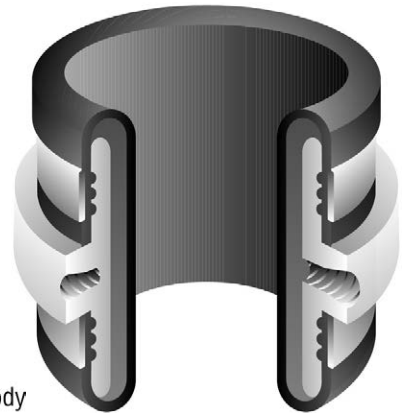

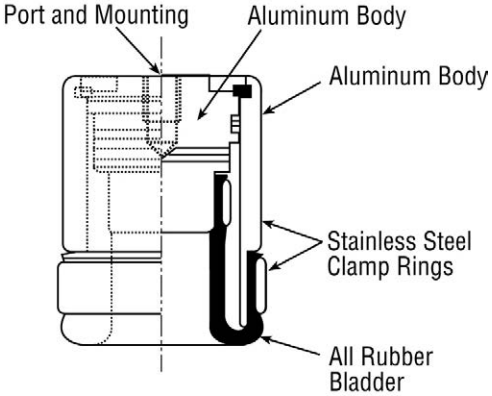

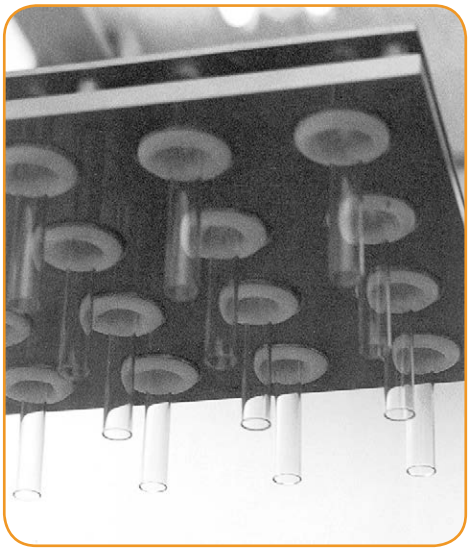

Important Air Hand Considerations

1 PRECONDITIONING

Preconditioning is required prior to placing Air Hands in service.
The Air Hands' reinforced bladders have small cotton threads, called pick cords, that are used to hold the nylon fabric cords together during production. Before the Air Hands are able to reach recommended working diameters, these pick cords must be broken through preconditioning. In order to break these cords, the Air Hands must be inflated unrestricted at the maximum recommended working pressure for 30 cycles. NOTE: Excessive unrestricted inflation will harm the rubber bladder. Be sure NOT TO HOLD pressure for more than 10 seconds when preconditioning.

2 UNRESTRICTED INFLATION

Repeated unrestricted inflation will prematurely damage an Air Hand.
Air Hands are best used in applications where at least 75% of the bladder's circumference is in contact with the part when inflated. If the application requires unrestricted inflation, a protective sleeve is recommended. The sleeve will reduce the amount of strain on the rubber bladder.

3 MAXIMUM RESTRICTED PRESSURE

The Air Hands' maximum working pressures are low and require the use of a regulator.
Life of an Air Hand will be extended by using the lowest pressure needed to accomplish the job. For example, you don't need 55psi to grip a small part such as a pen cap. Failure to use a regulator and limit the working pressure may result in bladder blow-out.

4 CONSIDER USING A PROTECTIVE SLEEVE

Sharp edges or rough surfaces will prematurely damage an Air Hand.
Consider using a protective sleeve to extend the Air Hand's life in applications where the Air Hand is gripping the part on a sharp edge, such as a parting line of a molded plastic part.

5 ENGINEERING HELP IS AVAILABLE

Engineering help is available.
Contact our engineering department for free assistance in sizing and configuring Air Hands for your particular application.

Air Hand Reconditioning

Air Hand Reconditioning - takes 10-12 weeks

Quick#	Part#	Price	Reconditioning for Air Hand:		
9031	RE-006-RCV	$207.08	#1300	GSG-IAH-10N	P006TR
9032	RE-007-RCV	$201.40	#1301	GSG-IAH-12N	P007TR
9033	RE-009-RCV	$194.80	#1302	GSG-IAH-17N	P009TR
9034	RE-010-RCV	$101.06	#1303	GSG-IAH-21N	P010TR
9035	RE-014-RCV	$109.86	#1304	GSG-IAH-27N	P014TR
9036	RE-017-RCV	$115.20	#1305	GSG-IAH-32N	P017TR
9037	RE-019-RCV	$121.60	#1306	GSG-IAH-36N	P019TR
9038	RE-022-RCV	$131.48	#1307	GSG-IAH-44N	P022TR
9039	RE-025-RCV	$138.42	#1308	GSG-IAH-52N	P025TR
9040	RE-035-RCV	$292.98	#1309	GSG-IAH-65N	P035T
9041	RE-045-RCV	$325.44	#1310	GSG-IAH-85N	P045T
9042	RE-055-RCV	$358.42	#1311	GSG-IAH-105N	P055T

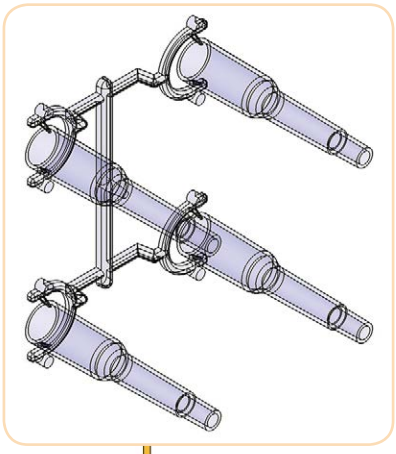

EOAT Design and Build Service

From the simplest to the most complex EOAT, EMI specializes in designing and building customized End-of-Arm-Tooling— Priced Competitively.

Get started by sending us a sample part or 3D part file and a completed datasheet (see page 972). Our EOAT engineers will design a tool for you and provide you 3D CAD renderings. We'll also provide pricing for the tool should you want to purchase the completely assembled EOAT from EMI. Whether or not you purchase the tool from EMI, there's no cost or obligation to you for the engineering design service.

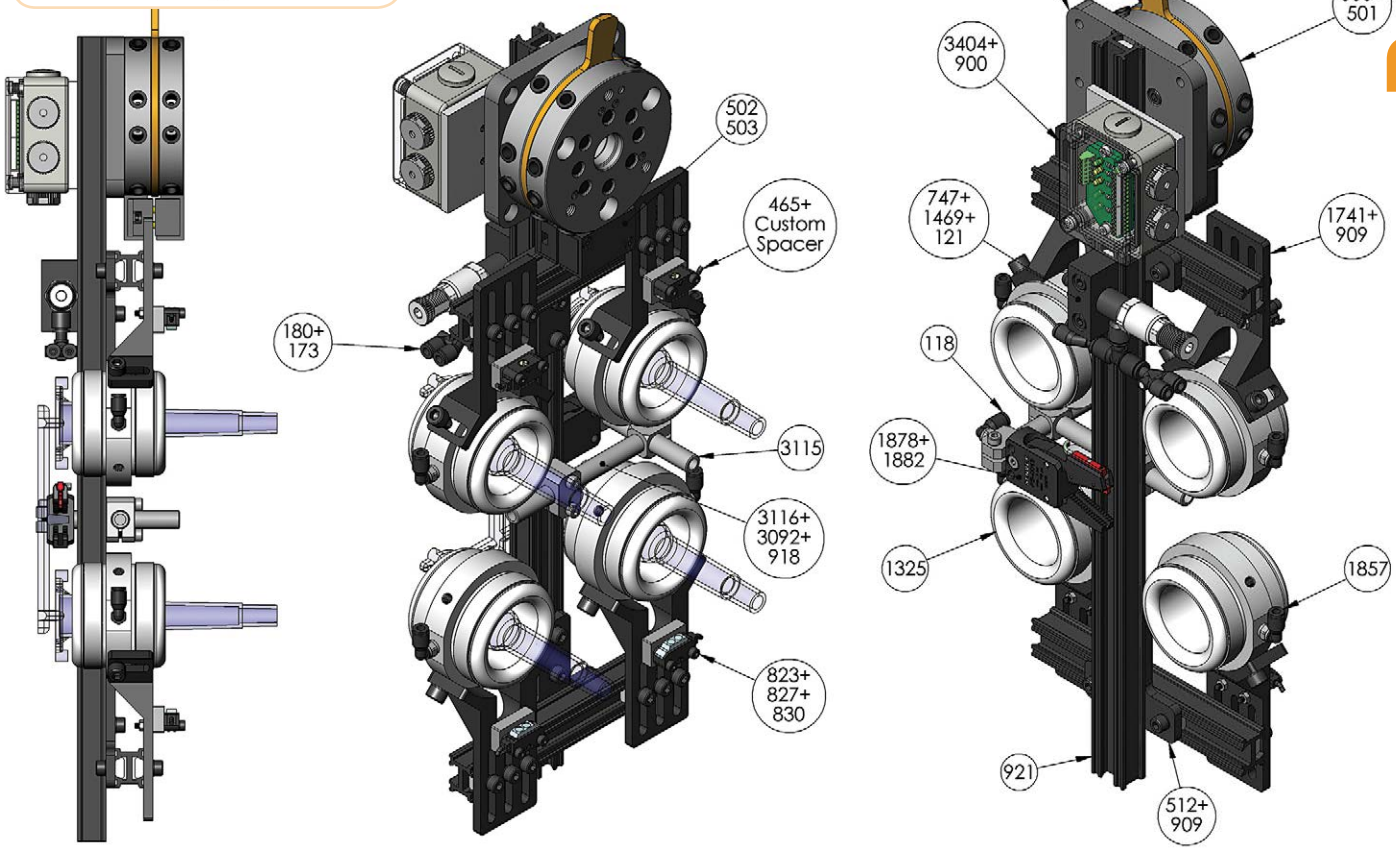

Lightweight ID Gripper

- Six models available, all having a Ø14mm clampable stud.
- Extremely lightweight, and normally closed.
- Made utilizing selective laser sintering technology.
- Optional magnetic field sensor for open/close position sensing.
- ID grip diameter from 8 to 27mm.
- Low cost alternative to air hands, tested to last 2 million cycles.
- Maximum operating temperature 176°F.
- Positive / negative pressure filter is recommended, see page 911.
- Maximum pressure 87psi (6bar).

#3635

#3630

#3632

Lightweight ID Gripper

Quick#	Part#	Price	ID Grip Ø	Air Hose Ø	Wt.	Payload
3630	IGP-14-8-12	$58.00	8–12mm	4mm	14g	100g
3631	IGP-14-11-15	$58.00	11–15mm	4mm	14g	100g
3632	IGP-14-14-18	$58.00	14–18mm	4mm	15g	100g
3633	IGP-14-17-21	$58.00	17–21mm	4mm	16g	100g
3634	IGP-14-20-24	$58.00	20–24mm	4mm	16g	100g
3635	IGP-14-23-27	$58.00	23–27mm	4mm	17g	100g
Sold Separately: Optional magnetic field sensors						
5497	D-M9P-SAPC	$42.06	PNP, 3-wire 300mm with M8 Connector			
5498	D-M9N-SAPC	$42.06	NPN, 3-wire 300mm with M8 Connector			
5430	D-M9PL	$33.70	PNP, 3-wire with 3m leads			
2412	D-M9NL	$33.70	NPN, 3-wire with 3m leads			

Lightweight ID Gripper

(Dimensioned drawings shown full scale)

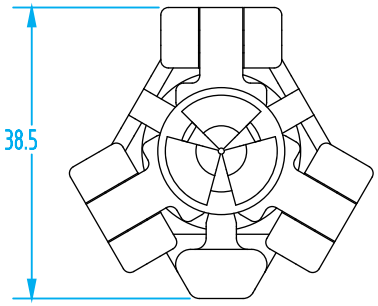

#3630

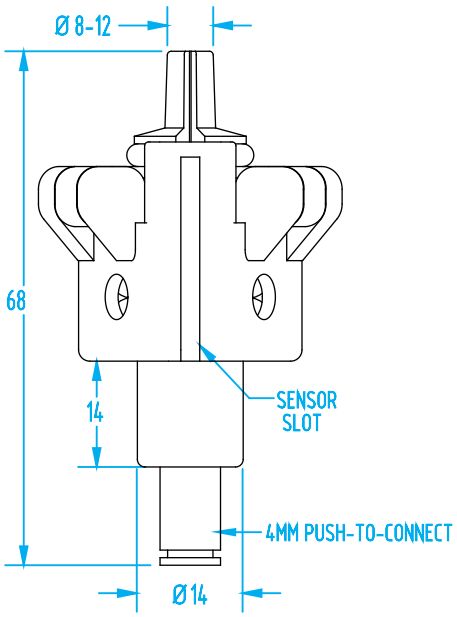

Use these dimensions for each of the ID Grippers Quick# 3630-3635

#3631

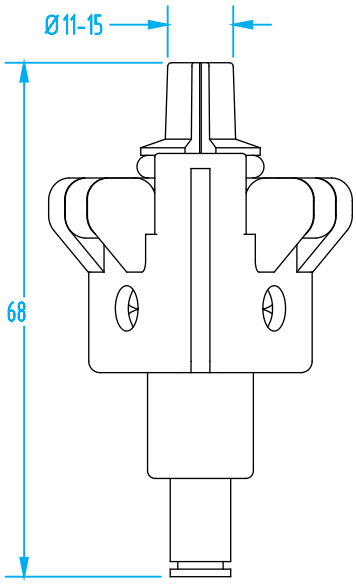

#3632

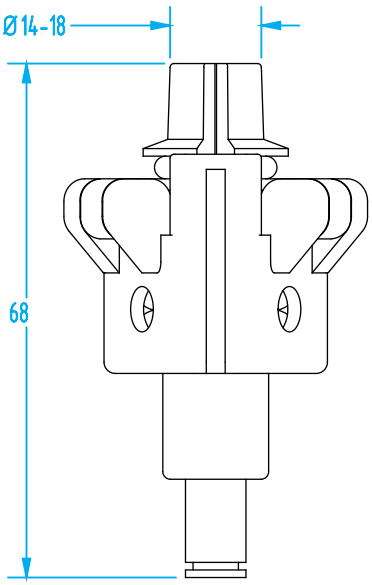

#3633

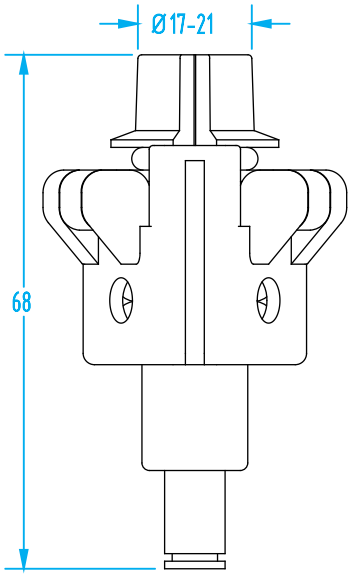

#3634

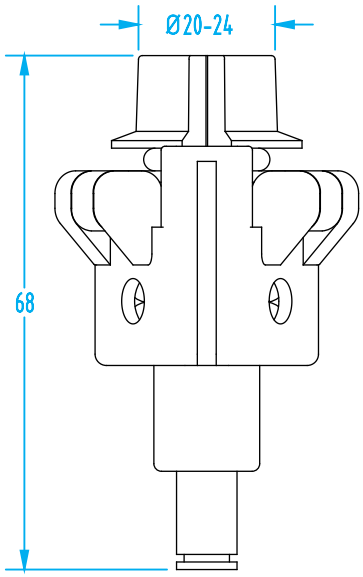

#3635

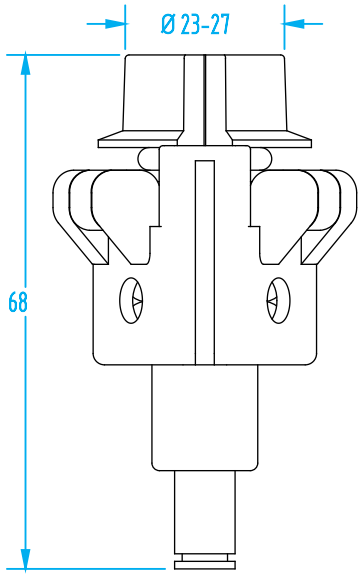

Lightweight ID Gripper

- Seven models available, all having a Ø20mm clampable stud.
- Extremely lightweight, and normally closed.
- Made utilizing selective laser sintering technology.
- Optional magnetic field sensor for open/close position sensing.
- ID grip diameter from 26 to 49mm.
- Low cost alternative to air hands, tested to last 2 million cycles.
- Maximum operating temperature 176°F.
- Positive / negative pressure filter is recommended, see page 911.
- Maximum pressure 87psi (6bar).

#3706

#3703

Lightweight ID Gripper

Quick#	Part#	Price	ID Grip Ø	Air Hose Ø	Wt.	Payload
3703	IGP-20-26-30	$158.00	26–30mm	4mm	42g	100g
3704	IGP-20-29-33	$158.00	29–33mm	4mm	43g	100g
3705	IGP-20-32-36	$158.00	32–36mm	4mm	44g	100g
3706	IGP-20-35-39	$158.00	35–39mm	4mm	46g	100g
3707	IGP-20-38-42	$158.00	38–42mm	4mm	46g	100g
3708	IGP-20-41-45	$158.00	41–45mm	4mm	50g	100g
3709	IGP-20-44-49	$158.00	44–49mm	4mm	52g	100g
Sold Separately: Optional magnetic field sensors						
5497	D-M9P-SAPC	$42.06	PNP, 3-wire Sensor with M8 Connector			
5498	D-M9N-SAPC	$42.06	NPN, 3-wire Sensor with M8 Connector			
5430	D-M9PL	$33.70	PNP, 3-wire with 3m leads			
2412	D-M9NL	$33.70	NPN, 3-wire with 3m leads			

Application Examples

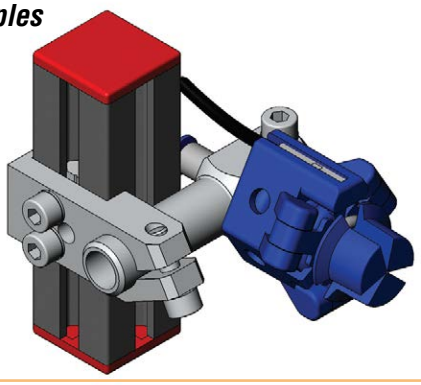

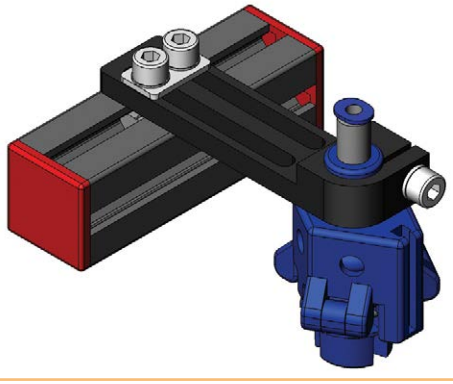

Lightweight ID Gripper

(Dimensioned drawings shown at 75% scale)

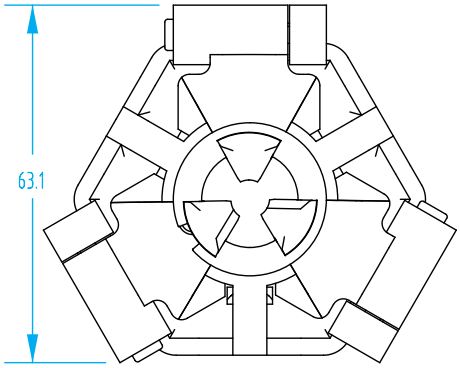

#3703

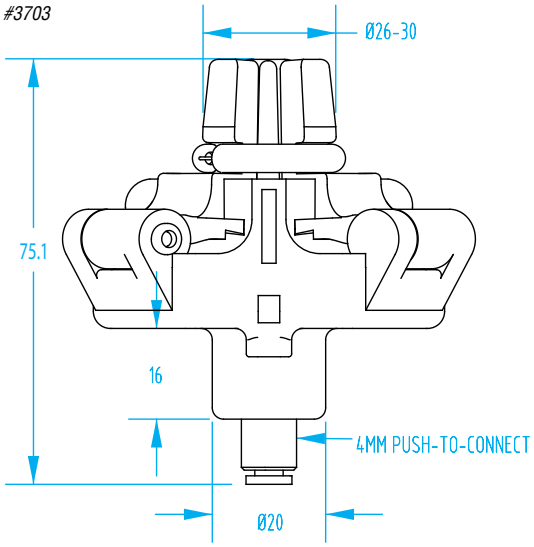

Use these dimensions for each of the ID Grippers Quick# 3703-3709

#3704

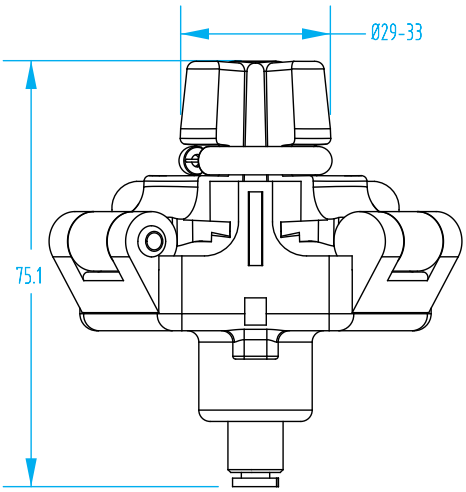

#3705

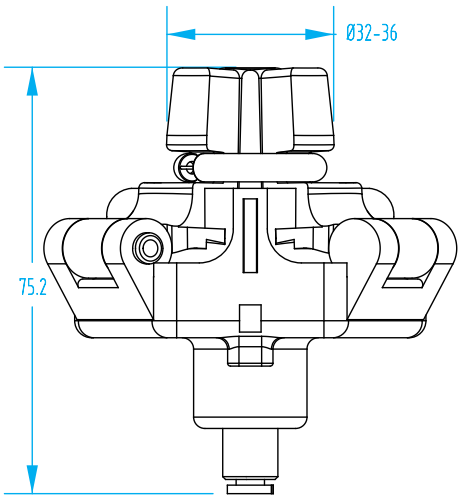

#3706

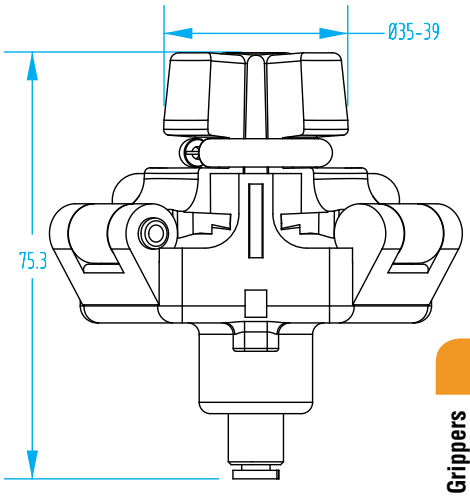

#3707

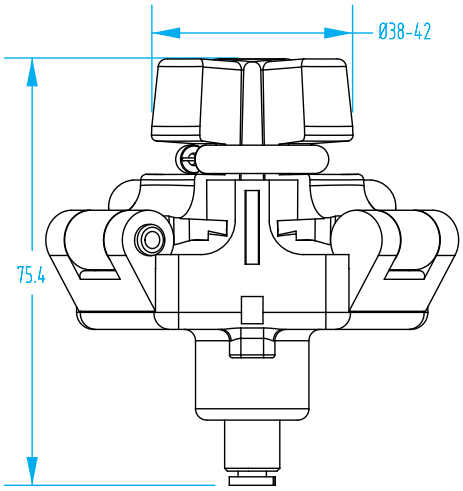

#3708

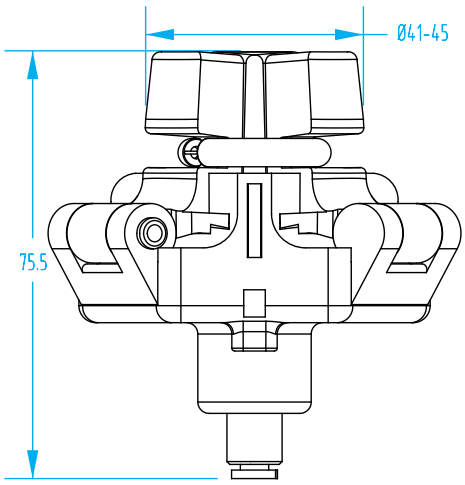

#3709

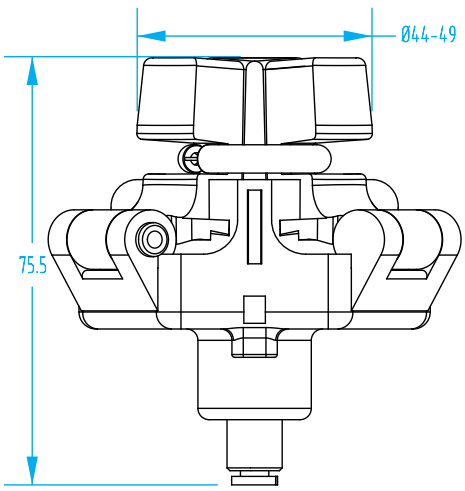

PT - Pneumatic Needle Gripper

- Suitable for textile and food industry
- Double acting
- Simultaneous stroke adjustment
- Several mounting accessories
- PT25: Large through hole
- PT28: Blow-off port for cleaning and releasing
- PT28: PTFE pad for hot surface contact
- PT28: Optional magnetic sensors

New PAAT Vacuum Cups on page 302 are an alternative to needle grippers for handling carbon fiber sheet and molded parts. PAAT Vacuum Cups do not damage the structure of composites.

#6759

#7370

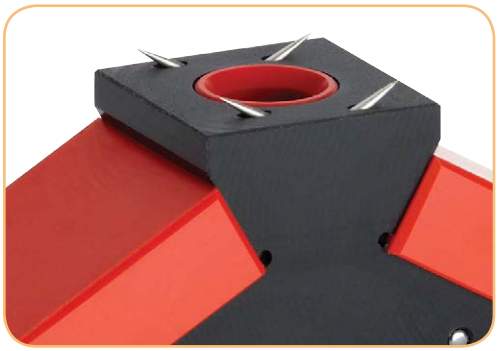

Part#	PT25	PT28
Quick#	**6759**	**7370**
Price	**$370.00**	**$499.00**
Medium	Filtered, lubricated/non-lubricated compressed air	
Pressure range	43.5–116 psi	
Total opening force at 87 psi	20lbf	
Needle stroke	1–7mm	
Number of needles	4	8
Needle depth	0–2.5mm	
Weight	165g	182g

When ordering, use Quick#s to ensure order accuracy.

Replacement Needles - sold separately

Quick#	Part#	Price
7199	PT-25-05	$3.50

PT - Pneumatic Needle Gripper

(Dimensioned drawings shown 1/2 scale)

PT25

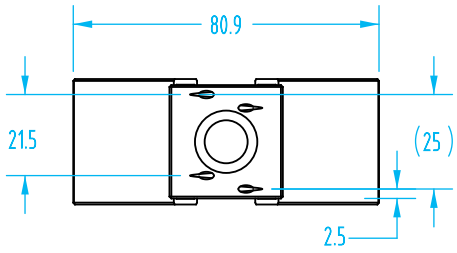

PT28

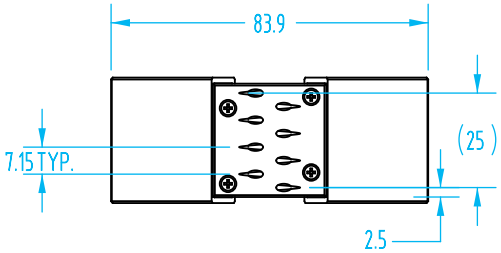

PT28 shown (PT25 has same body dimensions)

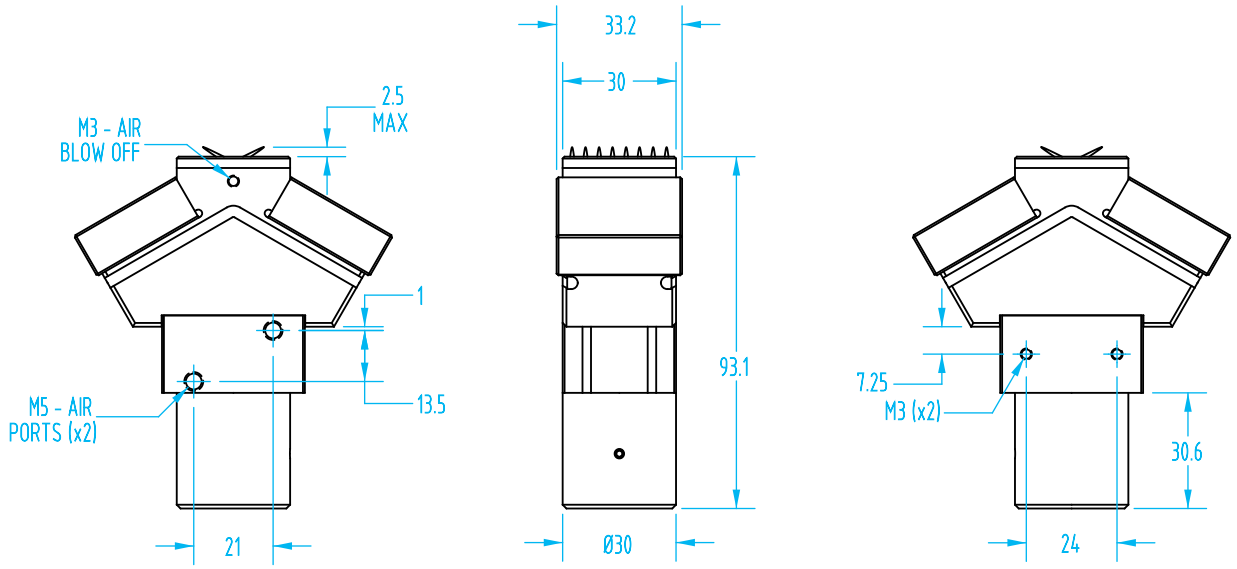

Simultaneous stroke adjustment of all 4 or 8 needles.

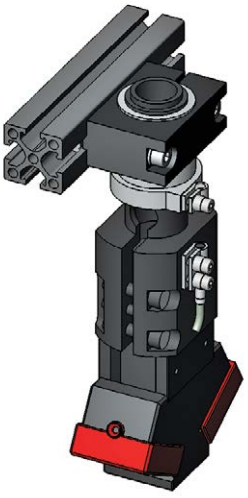

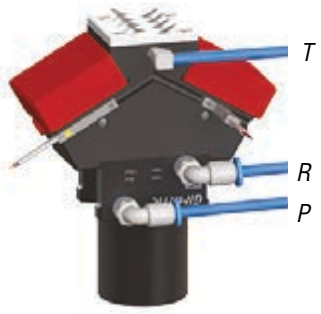

PT-28
T: Blow-off port
R: Needles out
P Needles in

PT-25 *Large thru-hole*

>ASS< Needle Grippers

- Available with 18 or 24 needles.
- Needle depth is adjustable between 0–2mm in 0.025mm increments.
- Single acting
- Air blow-off port

Needle depth is adjustable between 0–2mm in 0.025mm increments.

Adjustable Needle Gripper

Quick#	Part#	Price	Needle Depth	Air Connection	Wt.
3596	NGR-16-18E	$547.00	1.5–2.7mm	M5	230g
3629	NGR-16-24E	$547.00	1.5–2.7mm	M5	250g
Replacement Needles for 18 pin - Sold with 2 locators, each with 9 needles					
3825	NEEDLE-NGR-16	$194.50			

- Suitable for textile, cloth, carpet or any other material that can be penetrated.
- Through hole allows placement of cloth onto locating pins.
- New lightweight selective laser sintering version 30% lighter than aluminum body.
- Independent needle positioning and tandem stroke adjustment for fine tuning.
- Each cylinder is double acting.

Through Hole Needle Gripper

Quick#	Part#	Price	Body Style	Needle Depth	Air Connection	Wt.
3542	NGR-12-D	$410.00	Aluminum	0–2.5mm	M5	249.2g
3540	NGR-12-DL	$572.50	Laser Sintered	0–2.5mm	M5	160g
Replacement Needles - Sold in sets of 10						
3445	NEEDLE-50	$39.00				

Visit www.EMIcorp.com for dimensional drawings

>ASS< Needle Grippers

- Features 6 needles for secure grip of fabrics.
- Needles penetrate over cross and stretch the fabric for a more secure grip.
- Independent needle positioning and stroke adjustment.
- Double acting

Needle Gripper with 6 Needles

Quick#	Part#	Price	Needle Depth	Air Connection	Wt.
3484	NGR-12-6	$610.00	0–4mm	M5	190g
Replacement Needles - Sold in sets of 10					
3408	NEEDLE-37	$39.00			

- Suitable for textile, cloth, carpet or any other material that can be penetrated.
- Designed for installation on X-Profile.
- Sold in pairs, the grippers should be facing opposite directions.
- Mounting bracket included.
- Double acting (each unit)

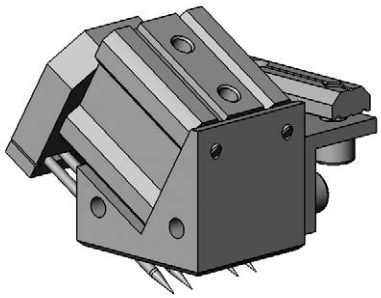

Needle Gripper (sold in pairs)

Quick#	Part#	Price	Needle Depth	Air Connection	Wt.
3535	NGR-X-16-10	$430.00	0–5mm	M5	150.3g
Replacement Needles - Sold in sets of 10					
3445	NEEDLE-50	$39.00			

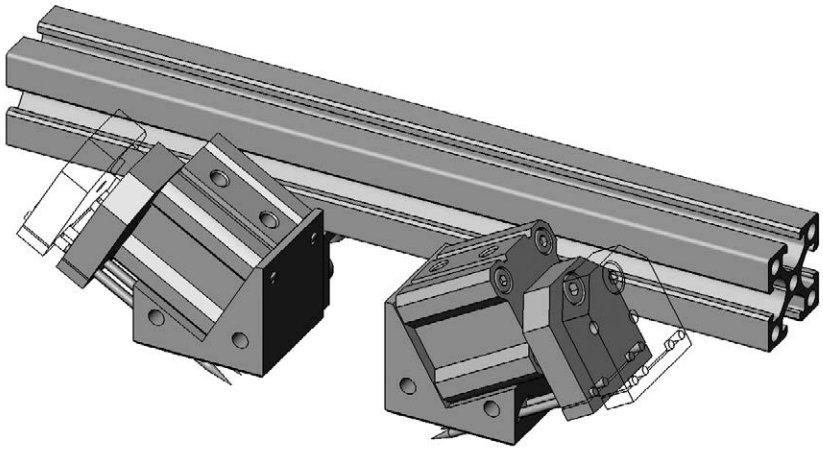

Magnetic Grippers

- Handling of ferromagnetic workpieces.
- Compact, heavy-duty aluminum housing with permanent magnet.
- Clip-on, easy to replace friction ring
- Bistable design: the magnet settings “grip” and “release” are maintained in event of power loss. No electric power required.
- High shear forces can be achieved
- Flexible mounting options
- Double acting

Magnetic Grippers

Quick#	Part#	Price	Holding Force*	Remaining Force	Operating Pressure	Operating Temp.	Wt.
1993	SGM-30-G18-IG	$285.00	7.8 lbf	0.06 lbf	50.7–87 psi	41°–158°F	130g
1994	SGM-40-G14-IG	$356.00	22.4 lbf				240g
1995	SGM-50-G14-IG	$404.00	40.4 lbf				440g

***Note: The value given is a static value with no safety factor; based on a plate with a thickness of 2mm. For system configurations with magnetic grippers, a safety factor of S = 3 must be applied.**

Replacement Friction Rings

Quick#	Part#	For:	Price
1996	SGM-30-RR	SGM-30	$33.95
1997	SGM-40-RR	SGM-40	$41.32
1998	SGM-50-RR	SGM-50	$52.23

Mounting Extensions (see page 955 for more information)

Quick#	Part#	Price	Thread	Tube Diameter	Length	Wt.
5750	MFI-A150	$11.45	G1/8"	Ø14	45	15g
5751	MFI-A151	$12.31	G1/8"	Ø14	90	25g
5752	MFI-A152	$12.31	G1/4"	Ø20	45	30g
5753	MFI-A153	$14.26	G1/4"	Ø20	90	55g

Application Examples

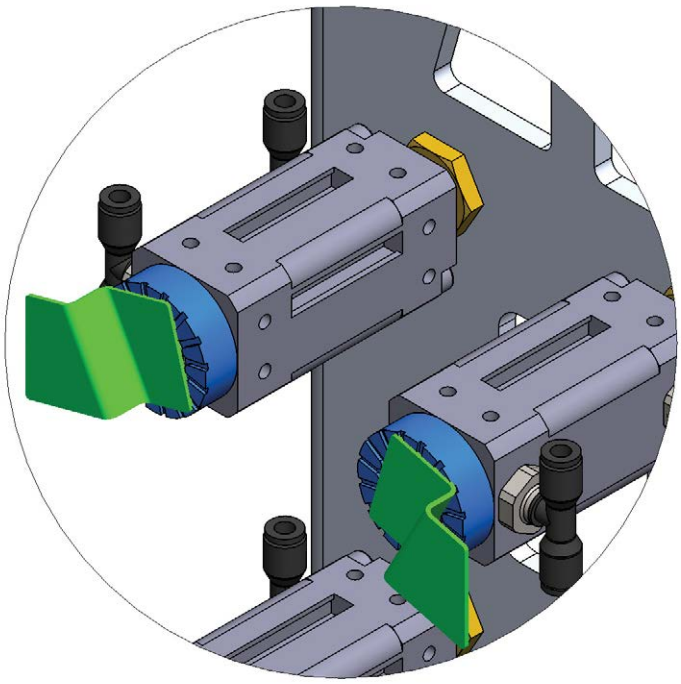

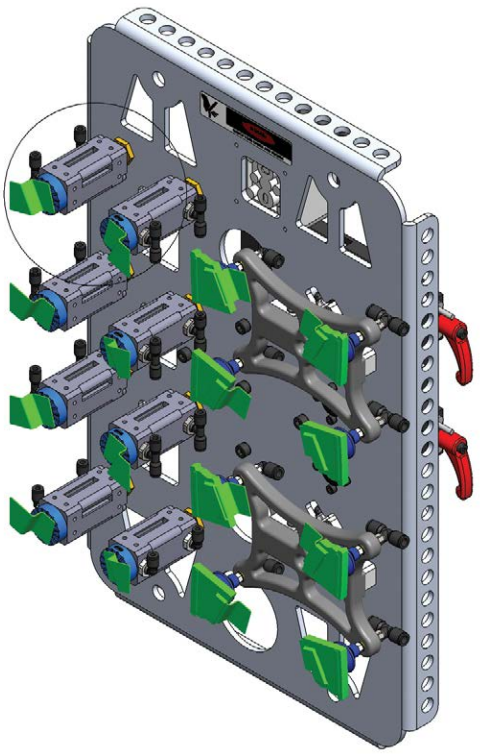

Magnetic Grippers

(SGM-30 Shown to Scale)

Ferromagnetic materials: Iron, Iron Alloys, Steel, Cobalt, Nickel
Non Ferromagnetic materials: Aluminum, Brass, Stainless Steel, Titanium, Copper

	SGM-30	SGM-40	SGM-50
B	30	40.6	50.6
X1	12	12	15
Y1	46	46	58
H1	70.2	70.2	80.2
H	61.4	61.4	71.4
G1	G1/8"	G1/4"	G1/4"
G2	G1/8"	G1/8"	G1/8"
G4	M4	M4	M5

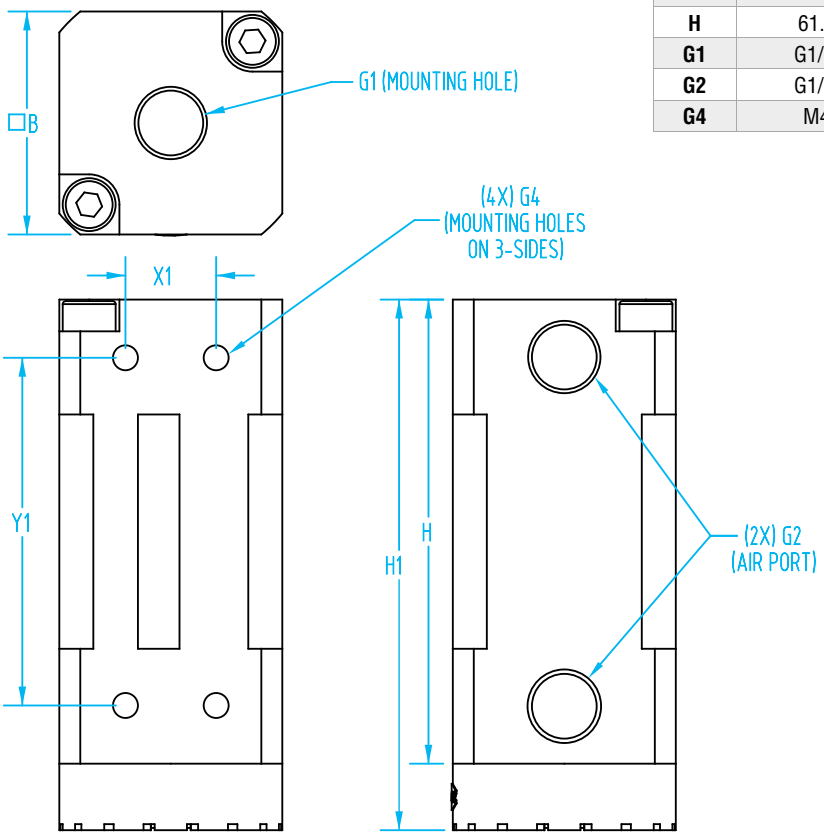

Application Example

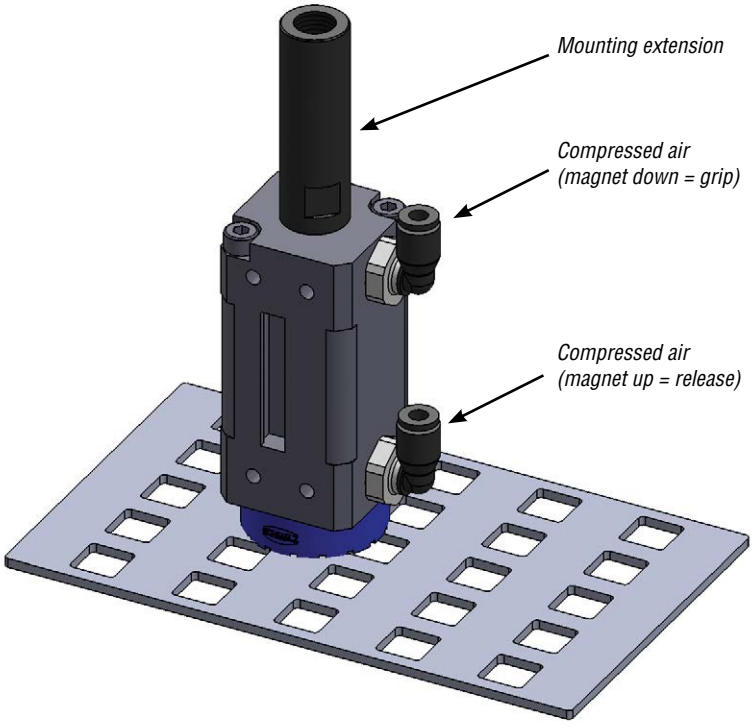

Electric Gripper Basics

Mechatronics

Mechatronics is the combination of mechanical engineering, electronic engineering, and information technology in order to design and manufacture useful, more reliable and innovative products.

Gimatic's electric grippers are designed to be used in place of traditional pneumatic components were compressed air circuits could be a liability. They operate in an on/off manner receiving their signal directly from a control panel. There is no programming needed or intermediary control device. An added benefit is the energy savings realized because the motor is only used to actuate the device. The actuator position is maintained by mechanical means when an object is gripped and motor cut off.

- No electricity is used when gripper is engaged.
- Gripper retention guaranteed in power loss.
- Long-life brushless DC motor.
- Built in motor driver.
- Operates on 24 volt DC and uses a simple ON/OFF signal from your PLC.
- M8x1, 3 poles standard connection.
- Self-centering jaw system (patented) on many grippers.
- Fiber-carbon gear reduction.
- Maintenance-free for 10 million cycles.
- Optimal force, weight, and dimensions ratio.
- Operating temperature range: 41°–140°F.
- Can be mounted to a rotary actuator without a special mounting plate.
- Optional magnetic sensors.
- NPN versions available upon request.

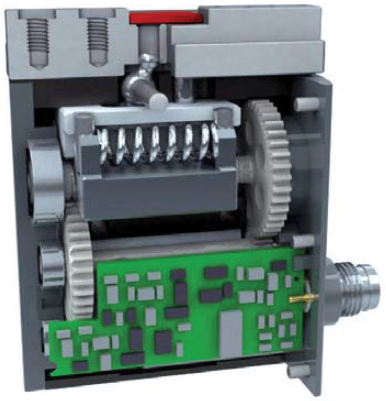

A microprocessor and all electronics are integrated into the gripper so that no other external controller is necessary. The microprocessor operates the motor and turns it off with no programming required.

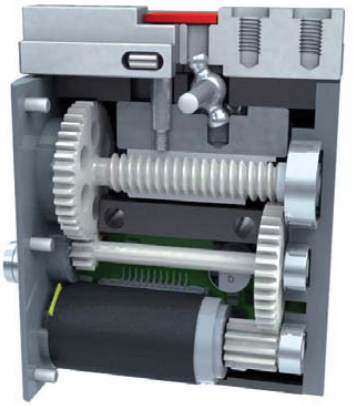

The carrier with the springs is driven by a 2-stage reducer and a worm. The carrier drives two jaws with a patented self-centering mechanism--already tested in other Gimatic grippers.

Electric Gripper Basics

Electrical Connection

Gimatic mechatronic devices have a 3-pin M8 connection that is used to receive both the 24VDC power and on/off signal.

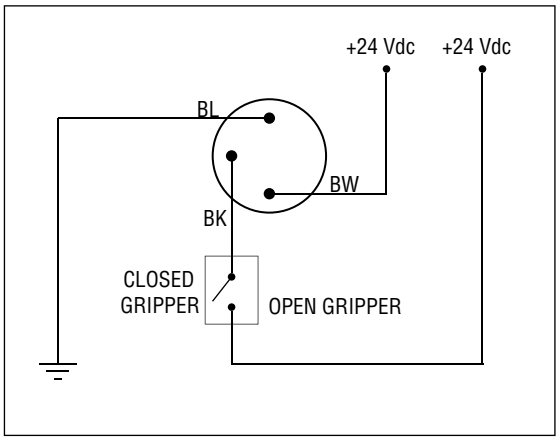

Continuous Flex Cables

Quick#	Part#	Description	Price
7160	CFGM800325P	2.5m cable 3-Wire with Straight M8 Connector	$13.00
7161	CFGM890325P	2.5m cable 3-Wire with 90° M8 Connector	$13.00

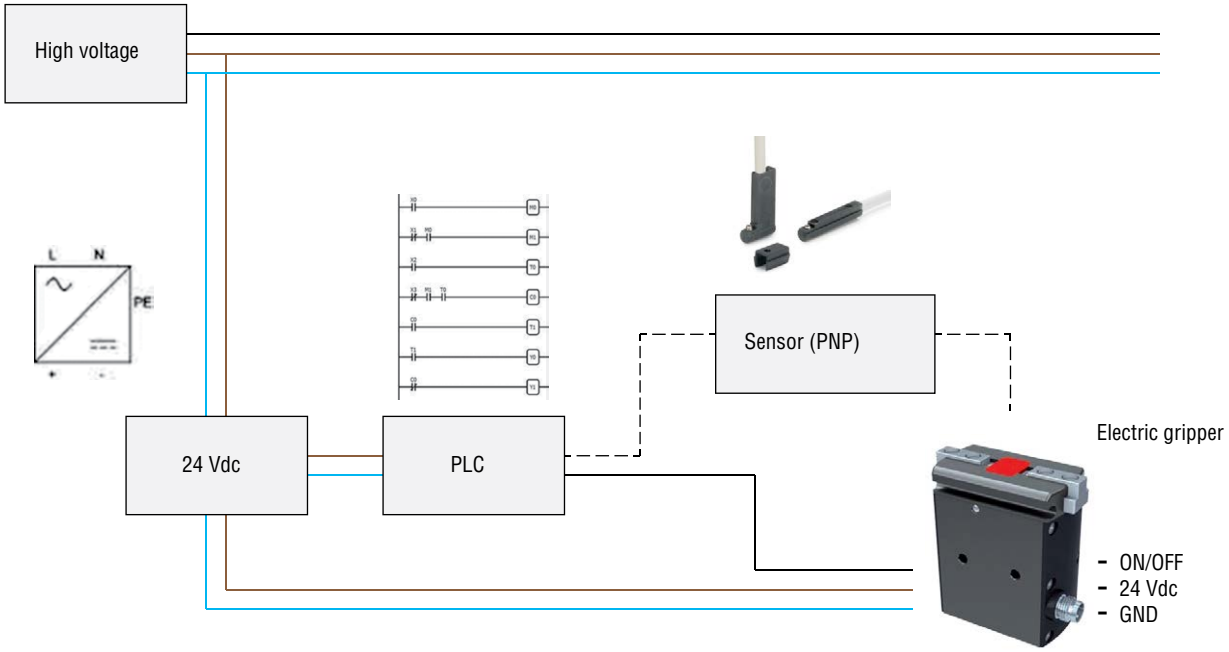

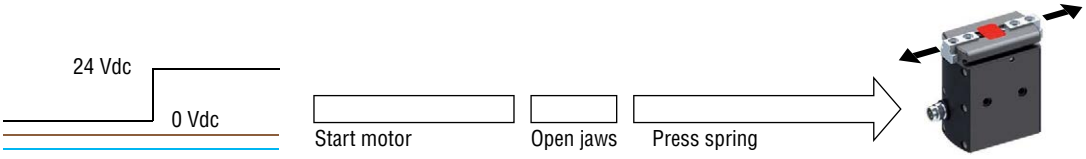

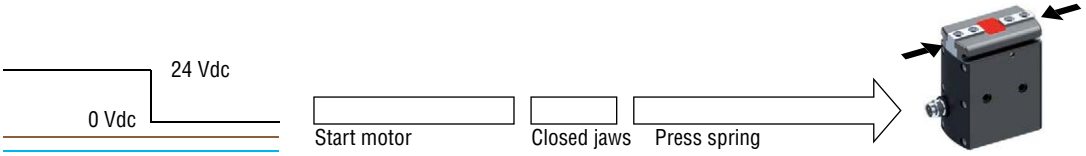

Electric Gripper Basics

Gripping force

These illustrations below show the operating state sequence of the drive system shared by the grippers, the actuators and the electric indexing tables.

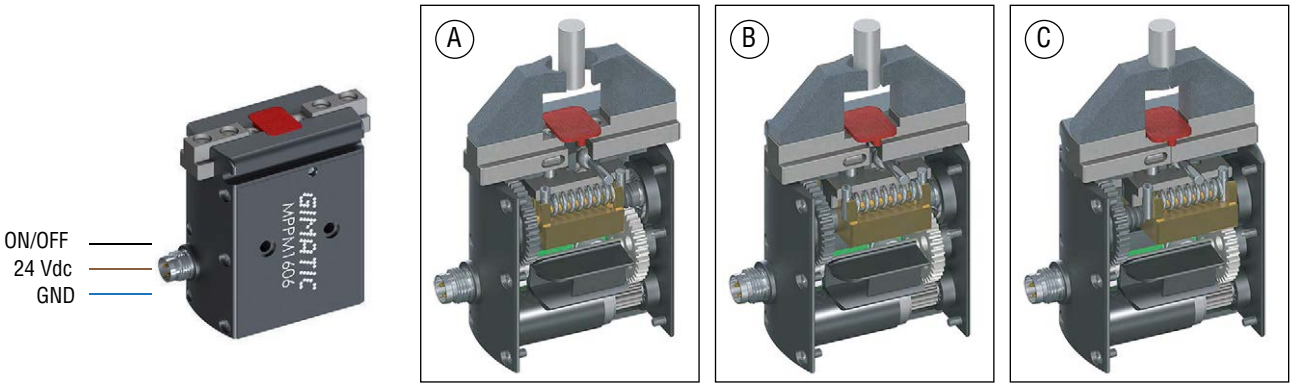

These states can also be identified in the motor's power absorption profile.

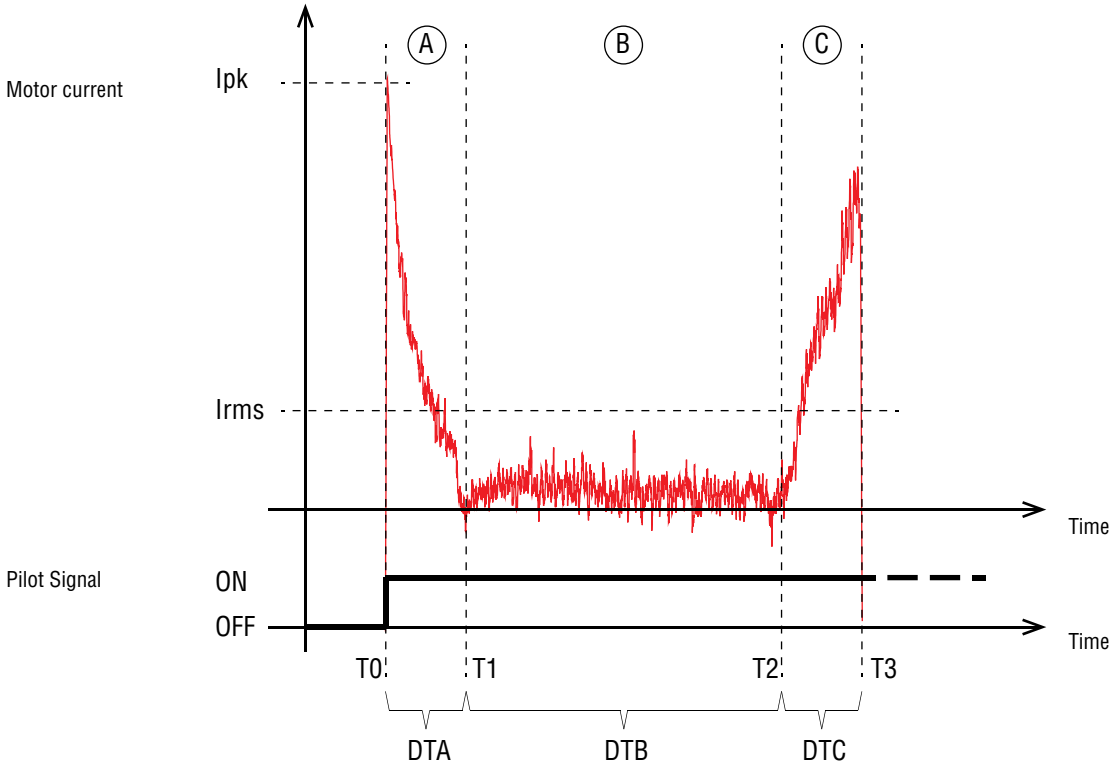

Operation description

At time T0, the pilot signal switches from OFF to ON status, closing the jaws.
During the DTA time, the motor starts to run; during phase A this causes the extension of the spring, which was initially compressed.
In phase B, the spring has reached its free length and the jaws move at constant speed until they come into contact with the workpiece at time T2.
During phase 3, the jaws are in contact with the workpiece, and compression of the spring starts.
At time T3, the motor stops running and the irreversible transmission system maintains the grip even when not powered up, until the next jaw opening command is given (OFF status).

Electric Gripper Basics

Gripping force

This electric gripper can be used for either external or internal gripping applications. The part will be gripped in any position within the jaw stoke. After the part is gripped, the spring force will hold the part. The gripper mechanism is irreversible, even without a power supply, so do not attempt to open or close the gripper manually.

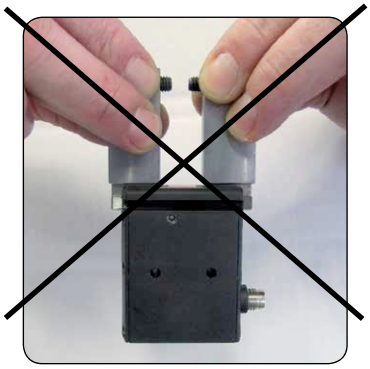

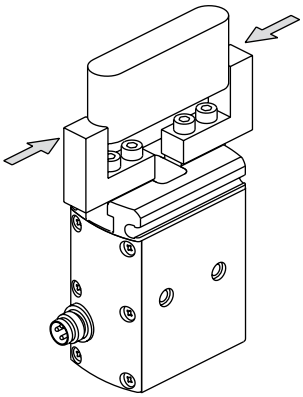

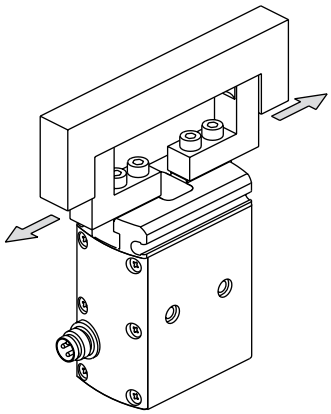

Gripping tool fastening

The gripping tools must be as short and light as possible. They must be fastened by two screws (SC) and two centering sleeves (BA) in the calibrated holes (D1) of the jaws.

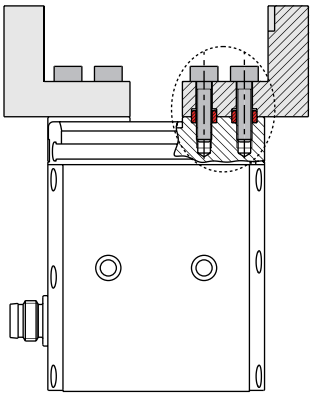

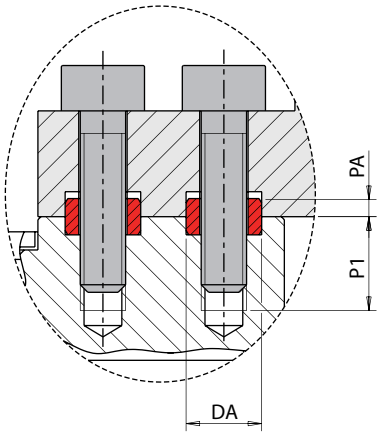

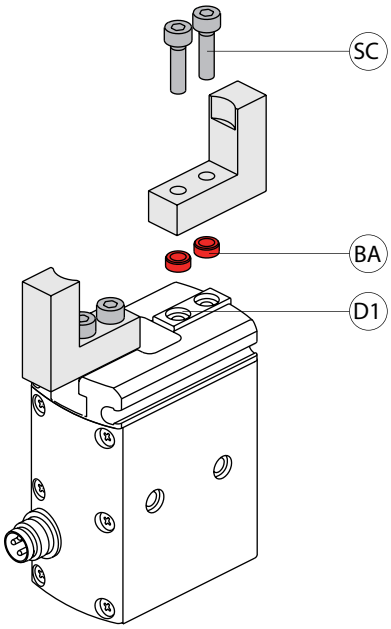

Series compatibility

MPTM grippers are perfectly compatible with MRE rotary actuators without using a special plate.

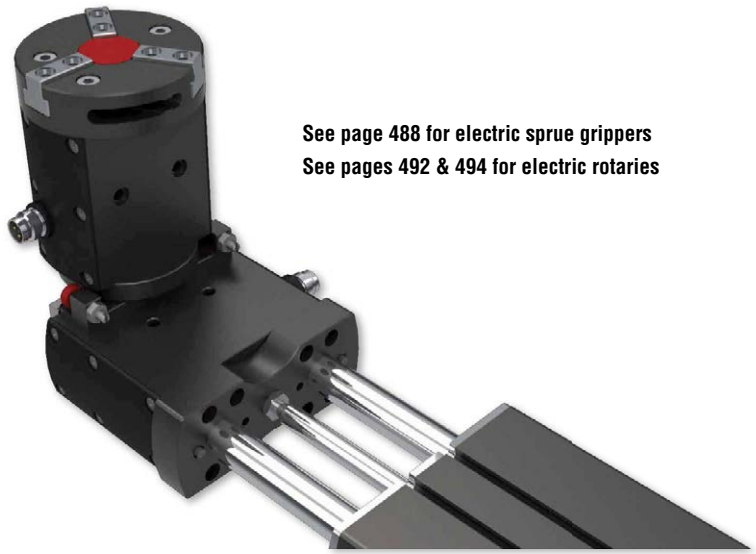

See page 488 for electric sprue grippers
See pages 492 & 494 for electric rotaries

MPPM - Two-Jaw Electric Grippers

- Self-centering jaw system (patented)
- Parallel jaw movement
- 6–10mm stroke
- T-slot style jaws for heavy loads
- Optional magnetic sensors available

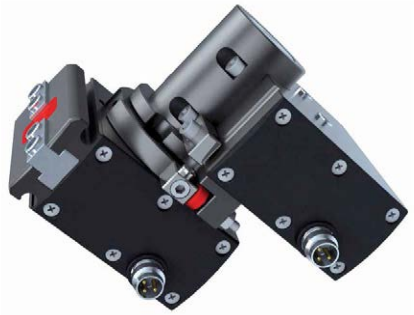

MPPM gripper series is perfectly compatible with MRE rotary series actuators without any special plate.

Part#	MPPM1606	MPPM2508	MPPM3210
Quick#	**6989**	**6990**	**6991**
Price	**$889.00**	**$954.00**	**$1018.00**
Total gripping force	11lbf	22lbf	54lbf
Stroke	2x3mm	2x4mm	2x5mm
Max frequency	1Hz	0.83Hz	0.66Hz
Cycle per minute	60	50	40
Opening/closing jaws time	0.05s	0.1s	0.15s
Working gripper time	0.2s	0.3s	0.4s
Duty cycle	40%	50%	60%
Peak current	0.8 A	1.2 A	3.4 A
Brushless motor power	6W	8W	11W
Open/closed input signal	PNP open connector		
Noise level	<70dB		
Weight (motor included)	146g	340g	550g
IPA Clean Room Certification	ISO04	TBA	TBA
CE Certification	CE; EMC		
Environmental Degree	IP54		

For more information visit: www.GimaticUSA.com

MPPM - Two-Jaw Electric Grippers

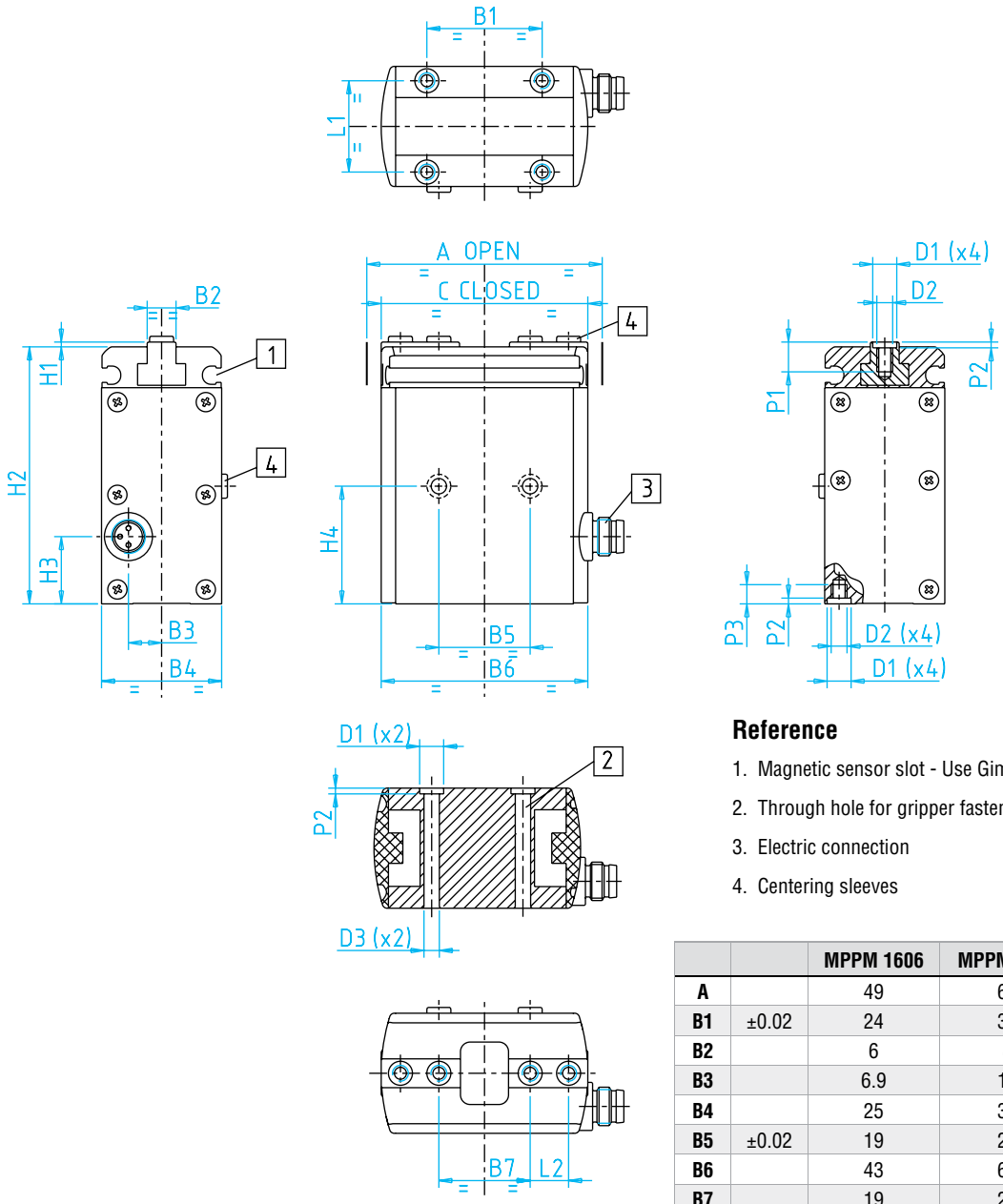

Reference

1. Magnetic sensor slot - Use Gimatic SS & SN sensors
2. Through hole for gripper fastening
3. Electric connection
4. Centering sleeves

		MPPM 1606	MPPM 2508	MPPM 3210
A		49	68	83
B1	±0.02	24	30	36
B2		6	8	9
B3		6.9	10	11
B4		25	32	35
B5	±0.02	19	25	30
B6		43	60	73
B7		19	26	32
C		43	60	73
D1		Ø5 H7	Ø7 H7	Ø H7
D2		M3	M4	M5
D3		Ø3.2	Ø4.2	Ø5.2
H1		1	1	1
H2		53.5	70	80
H3		14	17	19
H4	±0.02	24.5	32	38
L1	±0.02	19	24	26
L2	±0.02	8	12	14
P1		6.2	8	8.5
P2	+0.1	1.2	1.5	1.5
P3		4	6	8

MPXM - Two-Jaw Electric Grippers

- Self-centering jaw system (patented)
- Parallel jaw movement
- Self-adapting jaws part
- 12–20mm stroke
- T-slot style jaws for heavy loads
- Optional magnetic sensors available

MPXM gripper series is perfectly compatible with MRE rotary series actuators without any special plate.

Part#	MPXM1612	MPXM2516	MPXM3220
Quick#	**7266**	**7267**	**7268**
Price	**$1,018.00**	**$1,083.00**	**$1,147.00**
Total gripping force	15.29lbf	21.36lbf	48.33lbf
Stroke	2x6mm	2x8mm	2x10mm
Max frequency	0.75Hz	1.2Hz	0.85Hz
Jaw closing time	0.21s	0.19s	0.23s
Working gripper time	0.3s	0.28s	0.3s
Duty cycle	45%	68%	51%
Peak current	0.9 A	1.2 A	3.8 A
Brushless motor power	6W	11W	23W
Open/closed input signal	PNP open connector		
Repetition accuracy	0.02mm		
Noise level	<70dB		
Weight (motor included)	184g	390g	604g
Environmental Degree	IP60		

For more information visit: www.GimaticUSA.com

MPXM - Two-Jaw Electric Grippers

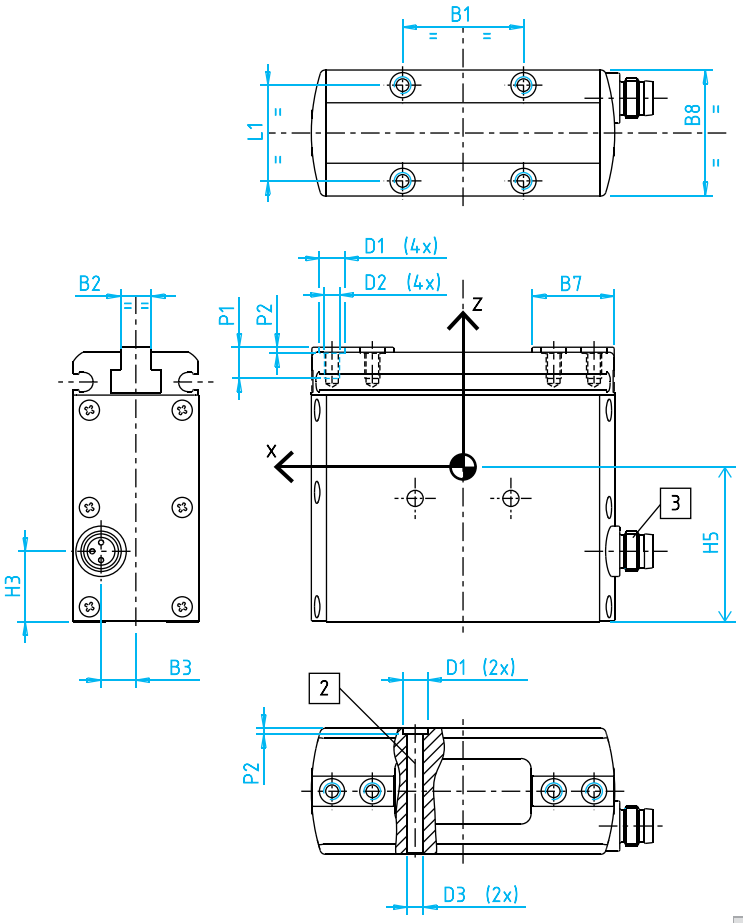

Reference

1. Magnetic sensor slot - Use Gimatic SS & SN sensors
2. Through hole for gripper fastening
3. Electric connection

		MPXM 1612	MPXM 2516	MPXM 3220
A		72	91	109
B1	±0.02	24	30	36
B2		6	8	9
B3		6.9	10	11
B4		36	41	48
B5	±0.02	19	25	30
B6		60.2	75	89
B7		16.3	22.5	28
B8		25	32	35
C		60	75	89
D1		Ø5 H8	Ø7 H8	Ø7 H8
D2		M3	M4	M5
D3		Ø3.2	Ø4.2	Ø5.2
H1		54.5	71	81
H2		53.5	70	80
H3		14	17	19
H4	±0.02	24.5	32	38
H5		32.3	42.6	48.4
L1	±0.02	19	24	26
L2	±0.02	8	12	14
P1		6.2	8	8.5
P2	+0.1	1.2	1.5	1.5
P3		4	7	8

MPLM - Two-Jaw Electric Grippers with Long Stroke

- Self-centering jaw system (patented)
- Parallel jaw movement
- 30–40mm stroke
- Self-adapting jaws part
- T-slot style jaws for heavy loads
- Optional magnetic sensors available

MPLM gripper series is compatible with MRE rotary series actuators with interface plate.

Part#	MPLM1630	MPLM2535	MPLM3240
Quick#	**7269**	**7270**	**7271**
Price	**$1,147.00**	**$1,211.00**	**$1,276.00**
Total gripping force	14.16lbf	22lbf	47.2lbf
Stroke	2x15mm	2x17.5mm	2x20mm
Max frequency	0.51Hz	0.93Hz	0.70Hz
Jaw closing time	0.37s	0.42s	0.50s
Working gripper time	0.52s	0.53s	0.53s
Duty cycle	54%	100%	74%
Peak current	0.9 A	1.2 A	3.8 A
Brushless motor power	6W	11W	23W
Open/closed input signal	PNP open collector		
Environmental Degree	IP54		
Noise level	<70dB		
Weight (motor included)	263g	500g	844g

For more information visit: www.GimaticUSA.com

MPLM - Two-Jaw Electric Grippers with Long Stroke

Reference

1. Magnetic sensor slot - Use Gimatic SS & SN sensors
2. Electric connection

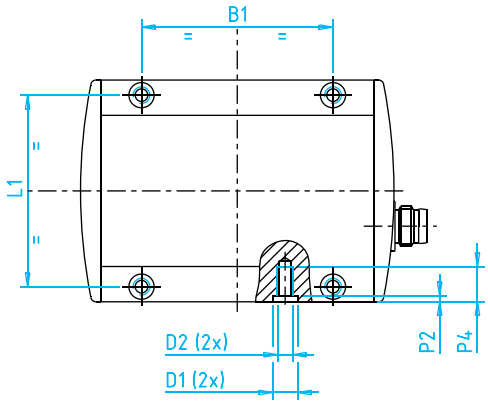

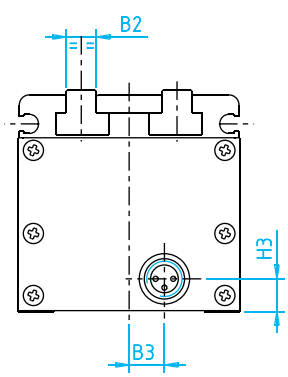

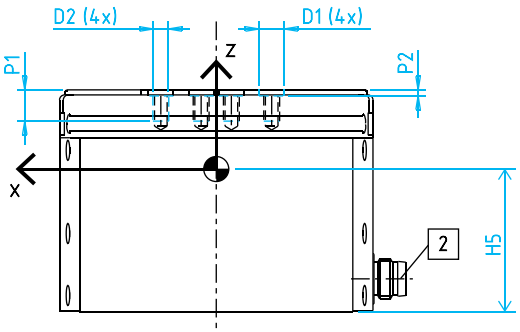

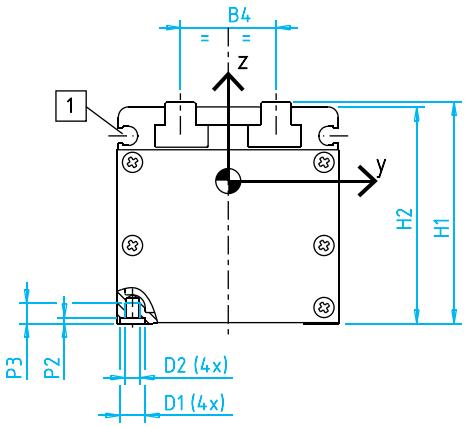

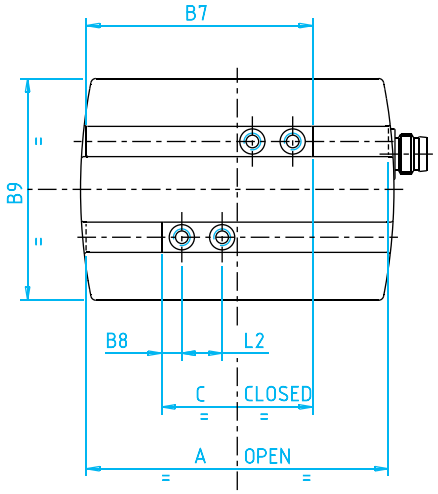

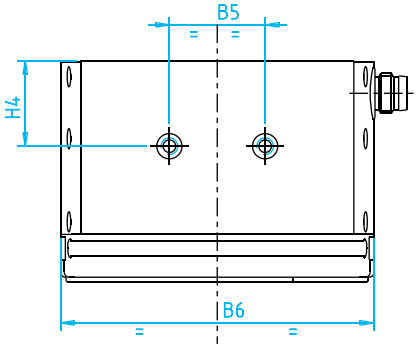

		MPLM 1630	MPLM 2535	MPLM 3240
A		60	74	88
B1	±0.02	38	45	54
B2		6	8	9
B3		7	17	15
B4		19	23	28
B5	±0.02	19	25	30
B6		62.2	77	91
B7		45	56.5	68
B8		4	5	6.5
B9		44	54	62
C		30	39	48
D1		Ø5 H8	Ø7 H8	Ø7 H8
D2		M3	M4	M5
H1		44	54	62
H2		43	53	61
H3		6.5	11.7	9.5
H4	±0.02	17	19.5	23
H5		26.6	32.2	36.7
L1	±0.02	38	45	54
L2	±0.02	8	12	14
P1		6.2	8	8.5
P2	+0.1	1.2	1.5	1.5
P3		4	6	8
P4		7	6	14

MPBM - Two-Jaw Electric Angular Grippers

- Self-centering jaw system (patented)
- Angular jaw movement
- Self-adapting jaws part
- Jaws contained within gripper profile
- Optional magnetic sensors available

MPBM gripper series is perfectly compatible with MRE rotary series actuators without any special plate.

Part#	MPBM1640	MPBM2540	MPBM3240
Quick#	**7260**	**7261**	**7262**
Price	**$889.00**	**$954.00**	**$1,018.00**
Total gripping force	15.29lbf	33.95lbf	62.27lbf
Stroke	2x23°	2x23°	2x23°
Max frequency	0.93Hz	0.85Hz	0.81Hz
Jaw closing time	0.09s	0.13s	0.14s
Working gripper time	0.18s	0.31s	0.25s
Duty cycle	34%	53%	41%
Peak current	0.9 A	1.2 A	3.8 A
Brushless motor power	6W	11W	23W
Open/closed input signal	PNP open connector		
Repetition accuracy	0.02mm		
Environmental Degree	IP60		
Noise level	<70dB		
Weight (motor included)	140g	315g	510g

For more information visit: www.GimaticUSA.com

MPBM - Two-Jaw Electric Angular Grippers

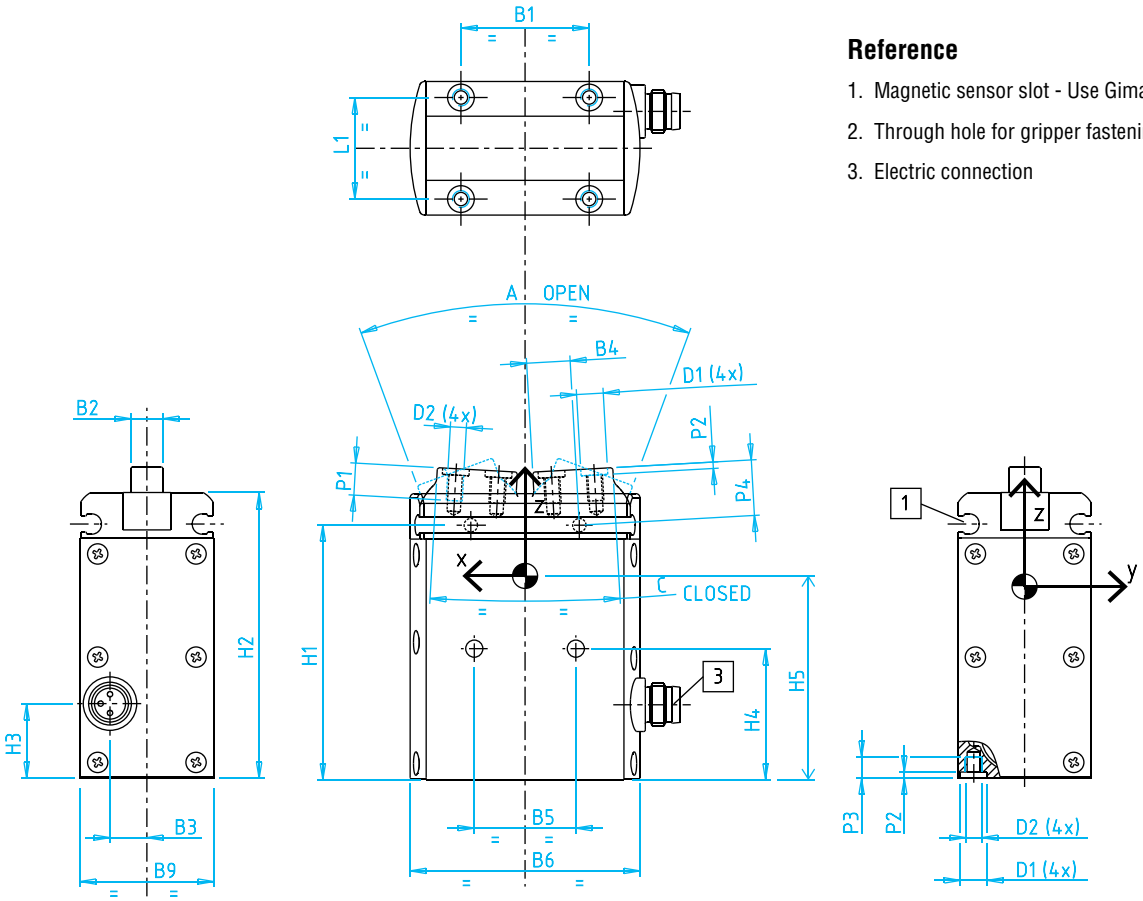

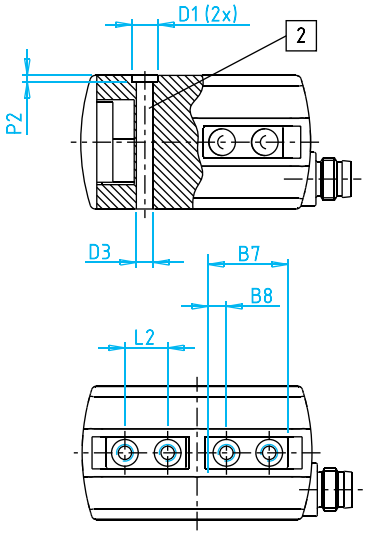

Reference

1. Magnetic sensor slot - Use Gimatic SS & SN sensors
2. Through hole for gripper fastening
3. Electric connection

		MPBM 1640	MPBM 2540	MPBM 3240
A		40°	40°	40°
B1	±0.02	24	30	36
B2		6	8	9
B3		6.9	10	11
B4		8.15	7.5	12.25
B5	±0.02	19	25	30
B6		43	60	73
B7		15	20	24
B8		3.5	4.5	5
B9		25	32	35
C		6°	6°	6°
D1		Ø5 H8	Ø7 H8	Ø7 H8
D2		M3	M4	M5
D3		Ø3.2	Ø4.2	Ø5.2
H1		47.6	63	72
H2		53.5	70	80
H3		14	17	19
H4	±0.02	24.5	32	38
H5		32.3	42.5	48.5
L1	±0.02	19	24	26
L2	±0.02	8	11	14
P1		6	8	10
P2	+0.1	1.2	1.5	1.5
P3		4	6	8
P4		10.4	14	16

MPRM - 2-Jaw Radial Self-Centering Electric Gripper

- Self-centering jaw system (patented)
- Radial jaw movement
- Optional magnetic sensors available

MPRM gripper series is perfectly compatible with MRE rotary series actuators without any special plate.

Part#	MPRM1690	MPRM2590	MPRM3290
Quick#	**7263**	**7264**	**7265**
Price	**$1,147.00**	**$1,211.00**	**$1,276.00**
Total gripping torque	4.6lbf	8lbf	22.66lbf
Stroke	2 x 93°		
Max frequency	0.85Hz	1.2Hz	0.9Hz
Jaw closing time	0.24s	0.31s	0.39s
Working gripper time	0.43s	0.42s	0.45s
Duty cycle	73%	100%	83%
Peak current	0.9 Apk	1.2 Apk	3.8 Apk
Brushless motor power	6W	11W	23W
Open/closed input signal	PNP open connector		
Repetition accuracy	0.02mm		
Environmental Degree	IP60		
Noise level	<70dB		
Weight (motor included)	210g	445g	730g

For more information visit: www.GimaticUSA.com

MPRM - 2-Jaw Radial Self-Centering Electric Gripper

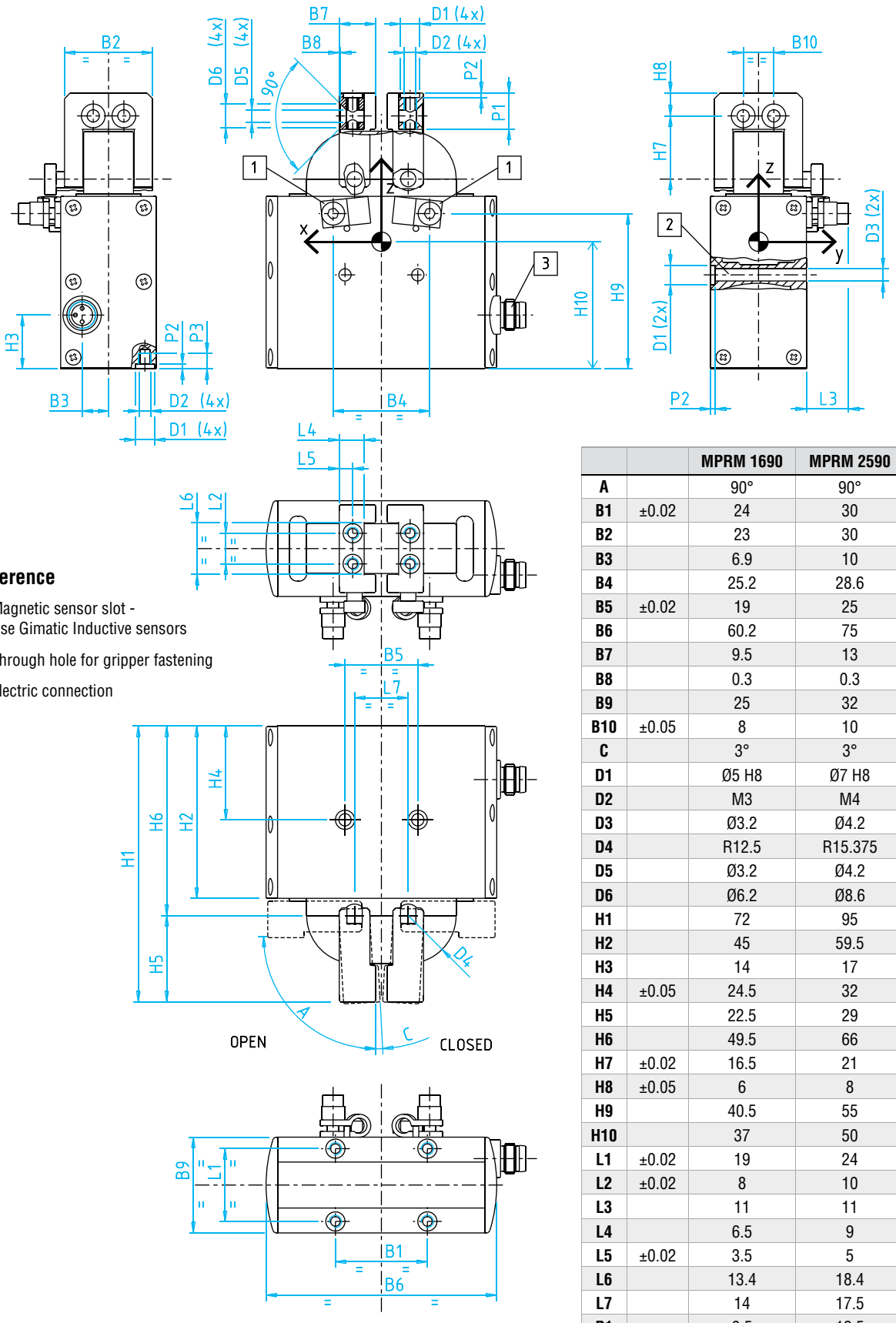

Reference

1. Magnetic sensor slot - Use Gimatic Inductive sensors
2. Through hole for gripper fastening
3. Electric connection

		MPRM 1690	MPRM 2590	MPRM 3290
A		90°	90°	90°
B1	±0.02	24	30	36
B2		23	30	34
B3		6.9	10	11
B4		25.2	28.6	33
B5	±0.02	19	25	30
B6		60.2	75	89
B7		9.5	13	16
B8		0.3	0.3	0.3
B9		25	32	35
B10	±0.05	8	10	12
C		3°	3°	3°
D1		Ø5 H8	Ø7 H8	Ø7 H8
D2		M3	M4	M5
D3		Ø3.2	Ø4.2	Ø5.2
D4		R12.5	R15.375	R18
D5		Ø3.2	Ø4.2	Ø5.2
D6		Ø6.2	Ø8.6	Ø10
H1		72	95	111
H2		45	59.5	68.5
H3		14	17	19
H4	±0.05	24.5	32	38
H5		22.5	29	34
H6		49.5	66	77
H7	±0.02	16.5	21	24.5
H8	±0.05	6	8	9.5
H9		40.5	55	64
H10		37	50	58.6
L1	±0.02	19	24	26
L2	±0.02	8	10	12
L3		11	11	11
L4		6.5	9	11
L5	±0.02	3.5	5	5
L6		13.4	18.4	20.4
L7		14	17.5	22
P1		9.5	12.5	15
P2	±0.1	1.2	1.5	1.5
P3		4	6	8

MPBS - 2-Jaw Angular Self-Centering Electric Sprue Gripper

- Self-centering jaw system (patented)
- Angular jaw movement
- S version with magnetic piece gripping sensor on the jaw

MPBS gripper series is perfectly compatible with MRE rotary series actuators without any special plate.

Part#	MPBS1630	MPBS1630N	MPBS1630S*	MPBS1630NS*
Quick#	**7349**	**7355**	**7350**	**7356**
Price	**$889.00**	**$889.00**	**$928.00**	**$928.00**
Total gripping force	13lbf			
Stroke	2x16mm			
Max frequency	1.2Hz			
Jaws closing time	0.06s			
Working gripper time	0.18s			
Duty cycle	41%			
Peak current	0.8 Apk			
Brushless motor power	6W			
Open/closed input signal	PNP open collector	NPN open collector	PNP open collector	NPN open collector
Repetition accuracy	0.04°			
Noise level	<70dB			
Environmental Degree	IP60			
Weight (motor included)	145g	145g	150g	150g
***Note: Sensing available on finger**				

For more information visit: www.GimaticUSA.com

MPBS - 2-Jaw Angular Self-Centering Electric Sprue Gripper

#7349 & 7355

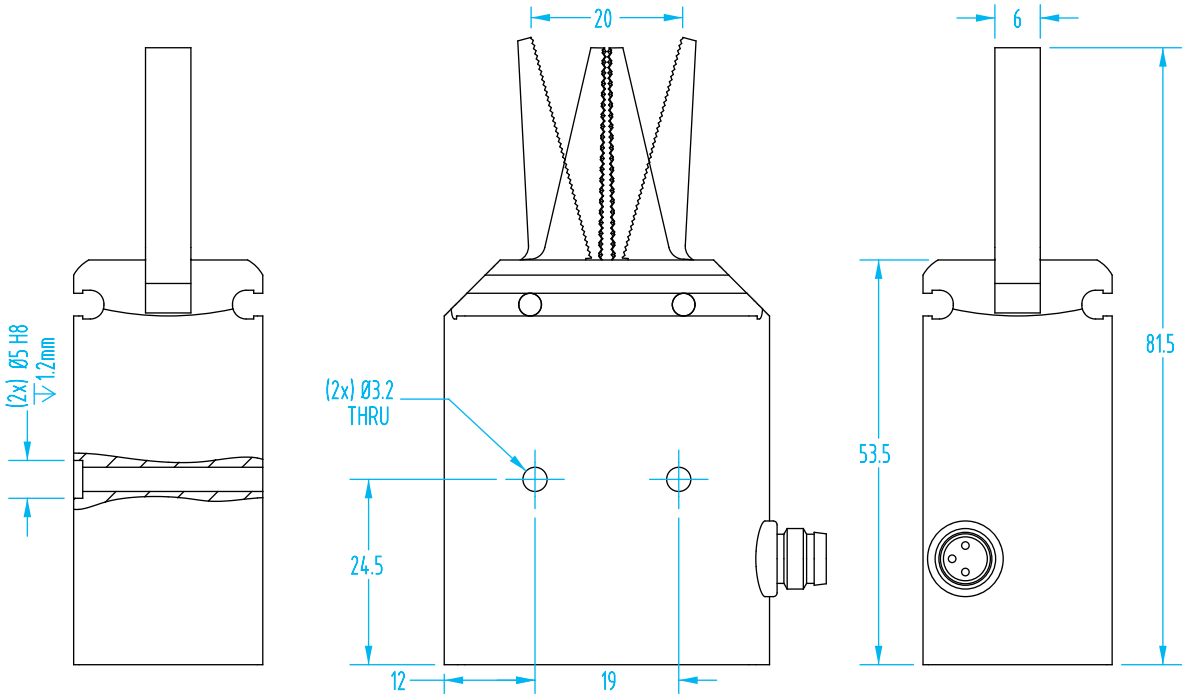

#7350 & 7353

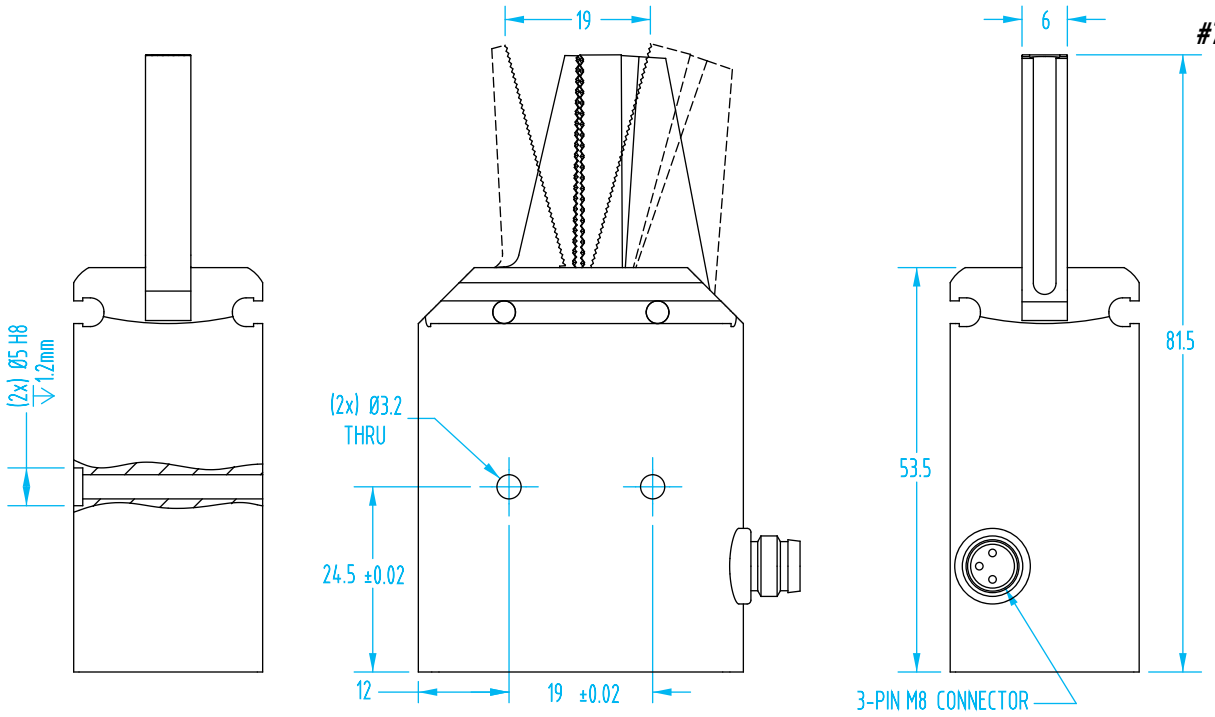

#7349 & 7355
#7350 & 7353
bottom view

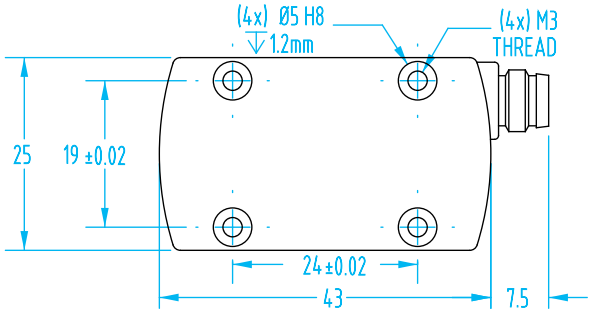

MPTM - Three-Jaw Electric Grippers

- Self-centering jaw system (patented)
- 3-jaw parallel jaw movement
- T-slot style jaws for heavy loads
- Optional magnetic sensors available

Part#	MPTM1606	MPTM2508	MPTM3210
Quick#	6992	6993	6994
Price	$1,018.00	$1,083.00	$1,147.00
Total gripping force	11lbf	22lbf	54lbf
Stroke	3x3mm	3x4mm	3x5mm
Max frequency	1Hz	0.83Hz	0.66Hz
Cycle per minute	60	50	40
Opening/closing jaws time	0.05s	0.1s	0.15s
Working gripper time	0.2s	0.3s	0.4s
Duty cycle	40%	50%	60%
Peak current	0.8 A	1.2 A	3.4 A
Brushless motor power	6W	8W	11W
Noise level	<70dB		
Weight (motor included)	183g	430g	693g
Environmental Degree	IP60		

For more information visit: www.GimaticUSA.com

MPTM - Three-Jaw Electric Grippers

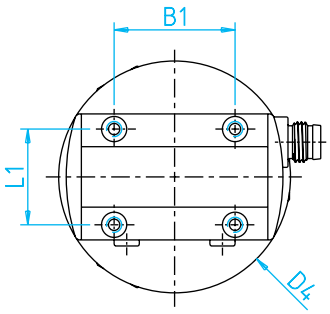

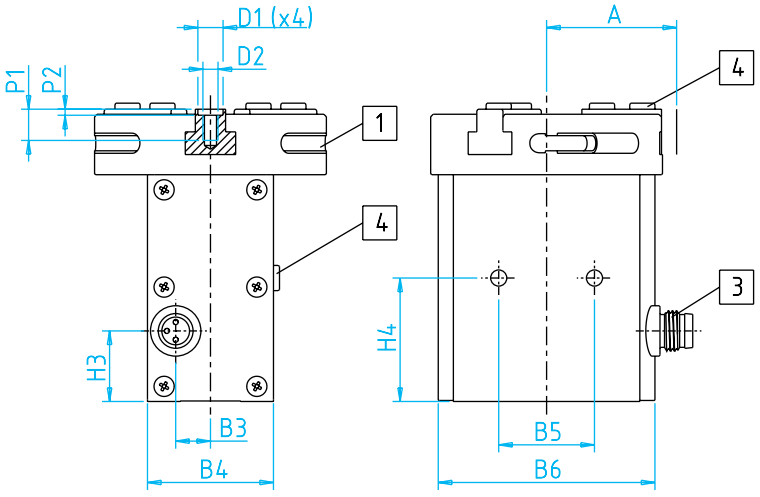

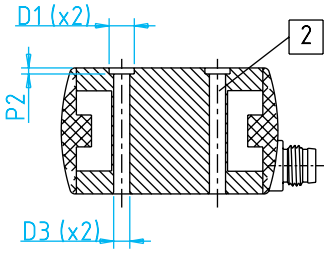

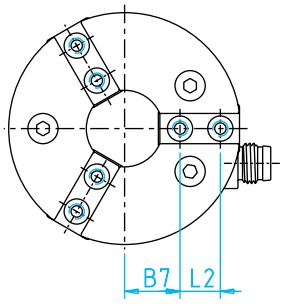

Reference

1. Magnetic sensor slot - Use Gimatic SS & SN sensors
2. Through hole for gripper fastening
3. Electric connection
4. Centering sleeves

		MPTM 1606	MPTM 2508	MPTM 3210
A		25.8	36	44
B1	±0.02	24	30	36
B2		6	8	9
B3		6.9	10	11
B4		25	32	35
B5	±0.02	19	25	30
B6		43	60	73
B7		11	15	18.5
C		22.8	32	39
D1		Ø5 H7	Ø7 H7	Ø H7
D2		M3	M4	M5
D3		Ø3.2	Ø4.2	Ø5.2
D4		Ø46	Ø64	Ø78
H1		1	1	1
H2		57	74.5	85.5
H3		14	17	19
H4	±0.02	24.5	32	38
H5		12	15	17
L1	±0.02	19	24	26
L2	±0.02	8	12	14
P1		6.2	8	8.5
P2	+0.1	1.2	1.5	1.5
P3		4	6	8

MRE - Electric Rotary Actuators

- Capable of 90° or 180° rotation
- Can be fitted to a gripper without a special mounting plate
- Optional inductive sensors available

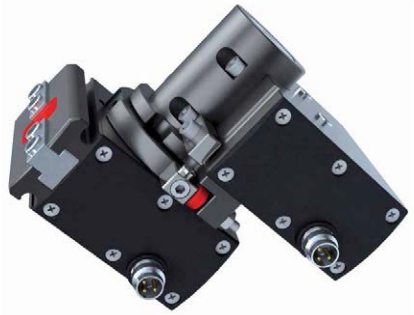

All electric grippers are perfectly compatible with MRE rotary series actuators without any special plate.

Part#	MRE16180		MRE25180		MRE32180	
Quick#	**6995**		**6996**		**6997**	
Price	**$1,018.00**		**$1,083.00**		**$1,147.00**	
Swivelling torque	4.0 in-lbf		7.1 in-lbf		12.2 in-lbf	
Swivelling angle	90°	180°	90°	180°	90°	180°
Max frequency	1Hz					
Cycles per minute	60					
Swivelling time without load	0.12s	0.28s	0.15s	0.30s	0.15s	0.30s
Working actuator time	0.35s	0.57s	0.33s	0.55s	0.36s	0.57s
Duty cycle	46%	66%	99%	100%	39%	79%
Power supply	24 Vdc ± 10%					
Peak current	0.9 A		1.2 A		3.8 A	
Brushless motor power	6W		8W		11W	
Connection	M8 - 3 pole					
Open/closed input signal	PNP open connector					
Noise level	<70dB					
Weight (motor included)	195g		400g		738g	
IPA Clean Room Certification	ISO04		TBA		TBA	
Environmental Degree	IP54					

For more information visit: www.GimaticUSA.com

MRE - Electric Rotary Actuators

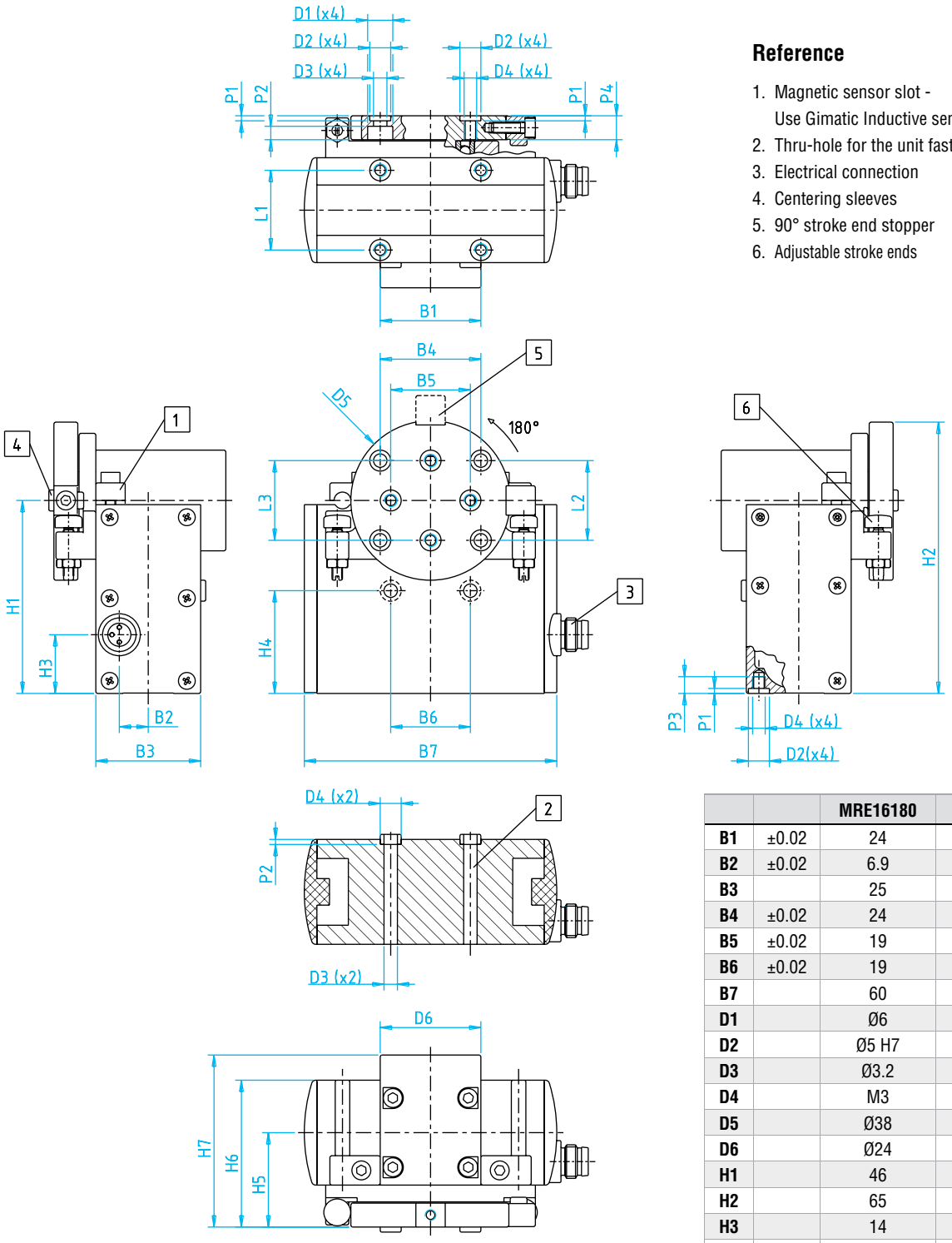

Reference

1. Magnetic sensor slot - Use Gimatic Inductive sensors
2. Thru-hole for the unit fastening
3. Electrical connection
4. Centering sleeves
5. 90° stroke end stopper
6. Adjustable stroke ends

		MRE16180	MRE25180	MRE32180
B1	±0.02	24	30	36
B2	±0.02	6.9	10	11
B3		25	32	35
B4	±0.02	24	30	36
B5	±0.02	19	25	30
B6	±0.02	19	25	30
B7		60	75	89
D1		Ø6	Ø7.5	Ø9
D2		Ø5 H7	Ø7 H7	Ø7 H7
D3		Ø3.2	Ø4.2	Ø5.2
D4		M3	M4	M5
D5		Ø38	Ø46	Ø55
D6		Ø24	Ø27	Ø31
H1		46	58.8	67.5
H2		65	81.8	95
H3		14	17	19
H4	±0.02	24.5	32	38
H5		22.5	28.5	33
H6		35	43.5	50.5
H7		41	52	60
L1	±0.02	19	24	26
L2	±0.02	19	22	26
L3	±0.02	19	25	30
P1		1.2	1.5	1.5
P2	+0.1	3.2	4.1	5
P3		4	6	8
P4		5.7	7.2	8.7

MTRE - Electric Indexing Table

- Available with 4, 6, 8 or 12 positions
- Available clockwise (ending C) or counter clockwise (ending A)
- High torque
- Suitable for heavy loads
- Mechanical indexing reset in the case of accidental block
- Optional magnetic sensors available

Clockwise	Part#	MTRE3204C	MTRE3206C	MTRE3208C	MTRE3212C
	Quick#	7331	7332	7333	7334
Counter-Clockwise	Part#	MTRE3204A	MTRE3206A	MTRE3208A	MTRE3212A
	Quick#	7351	7352	7353	7354
Price		$1,276.00	$1,276.00	$1,276.00	$1,276.00
Swivelling torque		196 Ncm			
Swivelling angle		4x90°	6x60°	8x45°	12x30°
Max frequency		0.95 Hz	0.9 Hz	0.85 Hz	0.8 Hz
Swivelling time without load		0.47s	0.36s	0.29s	0.19s
Working actuator time		0.53s	0.43s	0.47s	0.29s
Duty cycle		100%	80%	60%	50%
Power supply		24 Vdc ± 10%			
Peak current		3.8 Apk			
Brushless motor power		23W			
Connection		M8 - 3 pole			
Open/closed input signal		PNP open connector			
Noise level		<70dB			
Weight (motor included)		1800g			
Environmental Degree		IP54			

For more information visit: www.GimaticUSA.com

MTRE - Electric Indexing Table

Reference
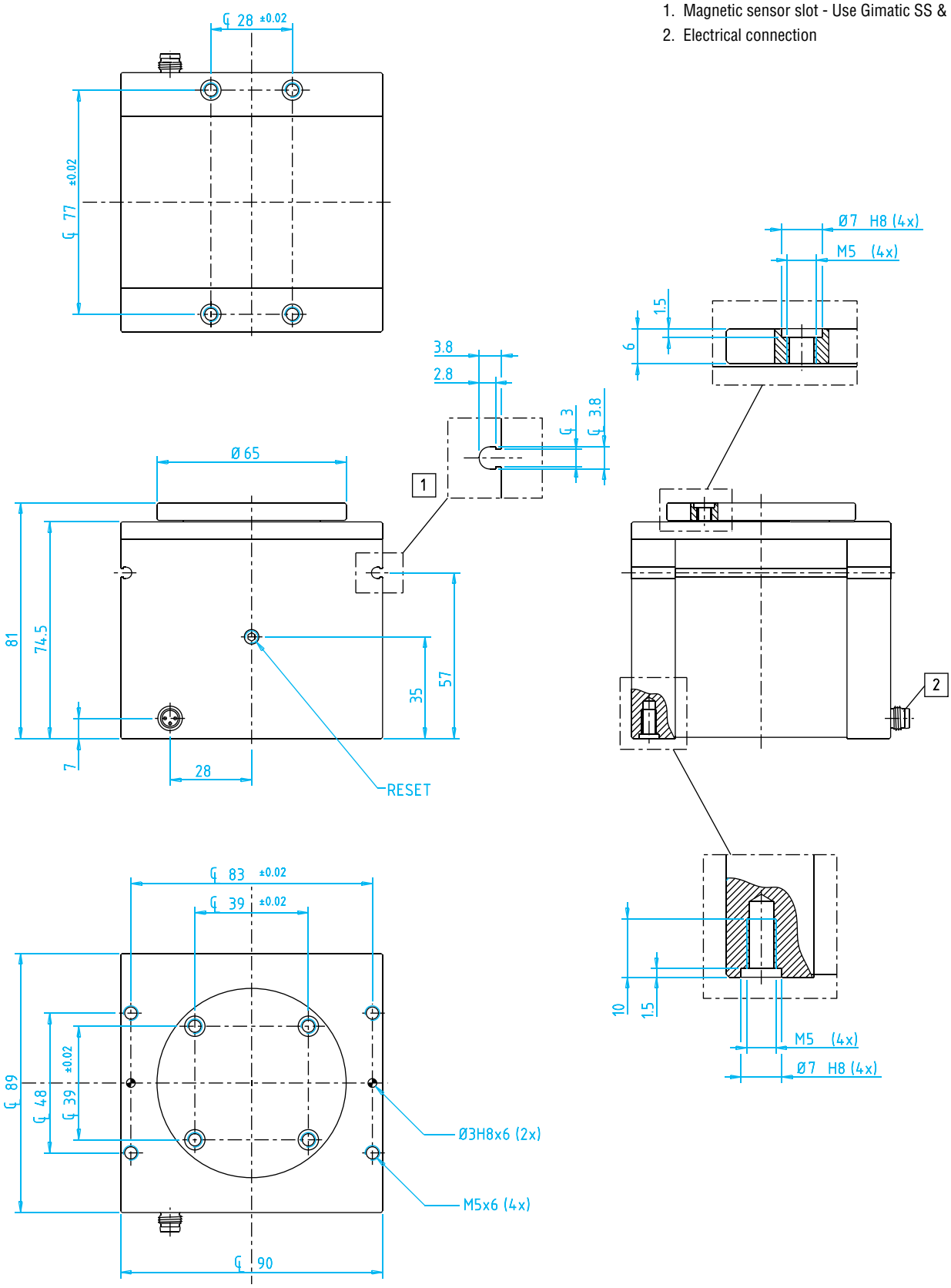
1. Magnetic sensor slot - Use Gimatic SS & SN sensors
2. Electrical connection