VG.B16 EPDM-HNBR bellows suction cups

- Suitable for handling plastic parts
- Suitable for objects with flat or slightly curved surfaces
- They enable to compensate for differences in height
- The HNBR version enables to work at high temperatures, whereas silicone or other mixtures may release traces of material. Ideal for applications where contamination of the material must be avoided (PWIS)
- The HNBR compound is robust and wear resistant, suitable for the removal of hot plastic parts from the relevant moulds

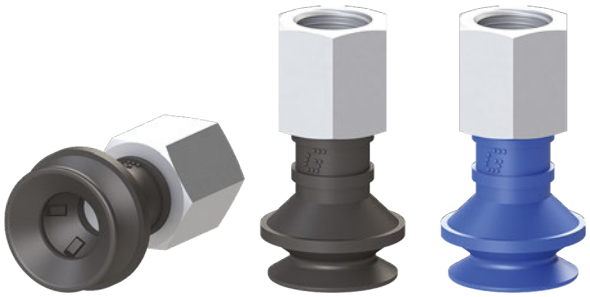

Application example

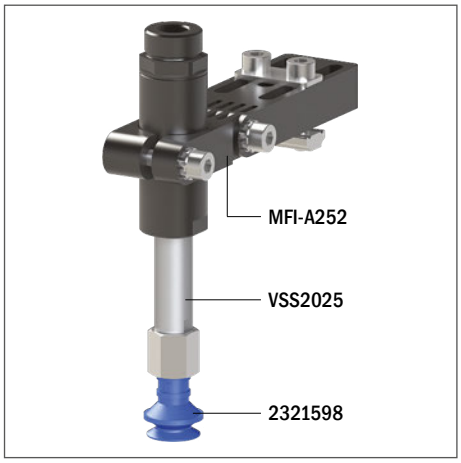

Technical data

Material	Lifting force [N] perpendicular to the surface, at various vacuum levels			Lifting force [N] parallel to the surface, at various vacuum levels			Volume	Min curve radius	Max vertical movement	Suction cup weight
	-20 kPa	-60 kPa	-90 kPa	-20 kPa	-60 kPa	-90 kPa	[cm³]	[mm]	[mm]	[g]
EPDM 50	3	5.8	8.5	1.71	3.1	3.9	1.1	5	6.5	2.1
HNBR 60	3	5.8	8.5	1.71	3.1	3.9	1.1	5	6.5	2.1

Technical features

Material	Color	Hardness	Temperature range
EPDM	Black	50 Shore	-40 – +212 °F
HNBR	Blue	60 Shore	-13 – +302 °F

Identification codes			
Drawing	Alphanumeric code	Suction cups with fitting	Order code
A	VG.B16E.50.M5F.E8	VG.B16 suction cup, EPDM, 50 Shore, M5 female, 8 mm hex	2321590
B	VG.B16E.50.M5M.E8	VG.B16 suction cup, EPDM, 50 Shore, M5 male, 8 mm hex	2321592
C	VG.B16E.50.G18F.E13	VG.B16 suction cup, EPDM, 50 Shore, G1/8" female, 13 mm hex	2321593
D	VG.B16E.50.G18M.E13	VG.B16 suction cup, EPDM, 50 Shore, G1/8" male, 13 mm hex	2321594
A	VG.B16H.60.M5F.E8	VG.B16 suction cup, HNBR, 60 Shore, M5 female, 8 mm hex	2321595
B	VG.B16H.60.M5M.E8	VG.B16 suction cup, HNBR, 60 Shore, M5 male, 8 mm hex	2321597
C	VG.B16H.60.G18F.E13	VG.B16 suction cup, HNBR, 60 Shore, G1/8" female, 13 mm hex	2321598
D	VG.B16H.60.G18M.E13	VG.B16 suction cup, HNBR, 60 Shore, G1/8" male, 13 mm hex	2321599

A

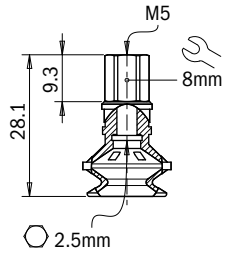

B

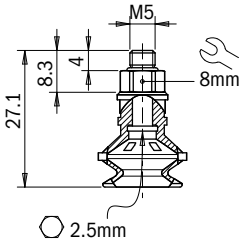

C

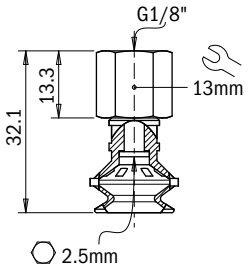

D

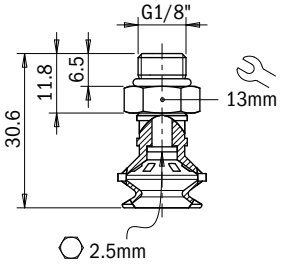

Identification codes			
Drawing	Alphanumeric code	Suction cups	Order code
A	VG.B16E.50	VG.B16 suction cup, EPDM, 50 Shore	2321591
A	VG.B16H.60	VG.B16 suction cup, HNBR, 60 Shore	2321596

A

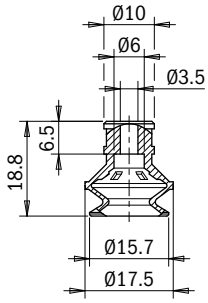

Identification codes			
Drawing	Alphanumeric code	Fittings	Order code
A	FT.M5F.E8	M5 female fitting, 8 mm hex	2321408
B	FT.M5M.E8	M5 male fitting, 8 mm hex	2321410
C	FT.G18F.E13	G1/8" female fitting, 13 mm hex	2321412
D	FT.G18M.E13	G1/8" male fitting, 13 mm hex	2321414

A

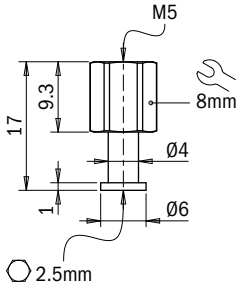

B

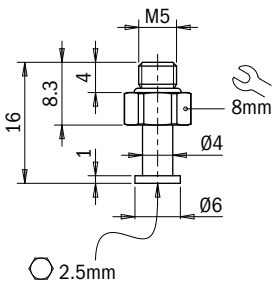

C

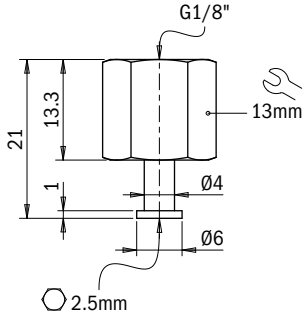
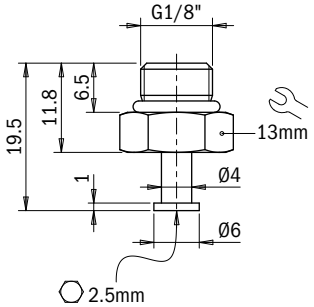
D