2-jaw parallel self-centering pneumatic gripper (series S)

- Hannover IF Design Award 1999 winner.
- Modular with Gimapick system.
- Double acting (single acting on request).
- Air feeding possible directly from the fixing plate.
- Easy fastening by through holes on the flange.
- High gripping force and low weight.
- Optional magnetic sensors.
- FDA-H1 food-grade grease.

	S25
Price	$401.00
Medium	Filtered compressed air, lubricated or non-lubricated
Pressure range	36-116 psi
Temperature range	41-140 °F
Gripping force on each jaw at 87 psi	22.5 lbf
Total gripping force at 87 psi	45 lbf
Total stroke ±0.012" (±0.3 mm)	0.417" (10.6 mm)
Maximum operating frequency	3 Hz
Air consumption per cycle	0.85 in^3
Closing time without load	0.01 s
Repetition accuracy	0.000787" (0.02 mm)
Weight	400g

Dimensions (mm)

	A	B	C	D	E	F	G	H ±0.02	I	M -0.05	N -0.05	O	P	Q	R	S	T	U	V	Z	AB
S25	56	60	48	5	40	19.6	55	30.4	56	18	18	11	91	80.4	Ø70	40	27	14	48	R 35	R 12

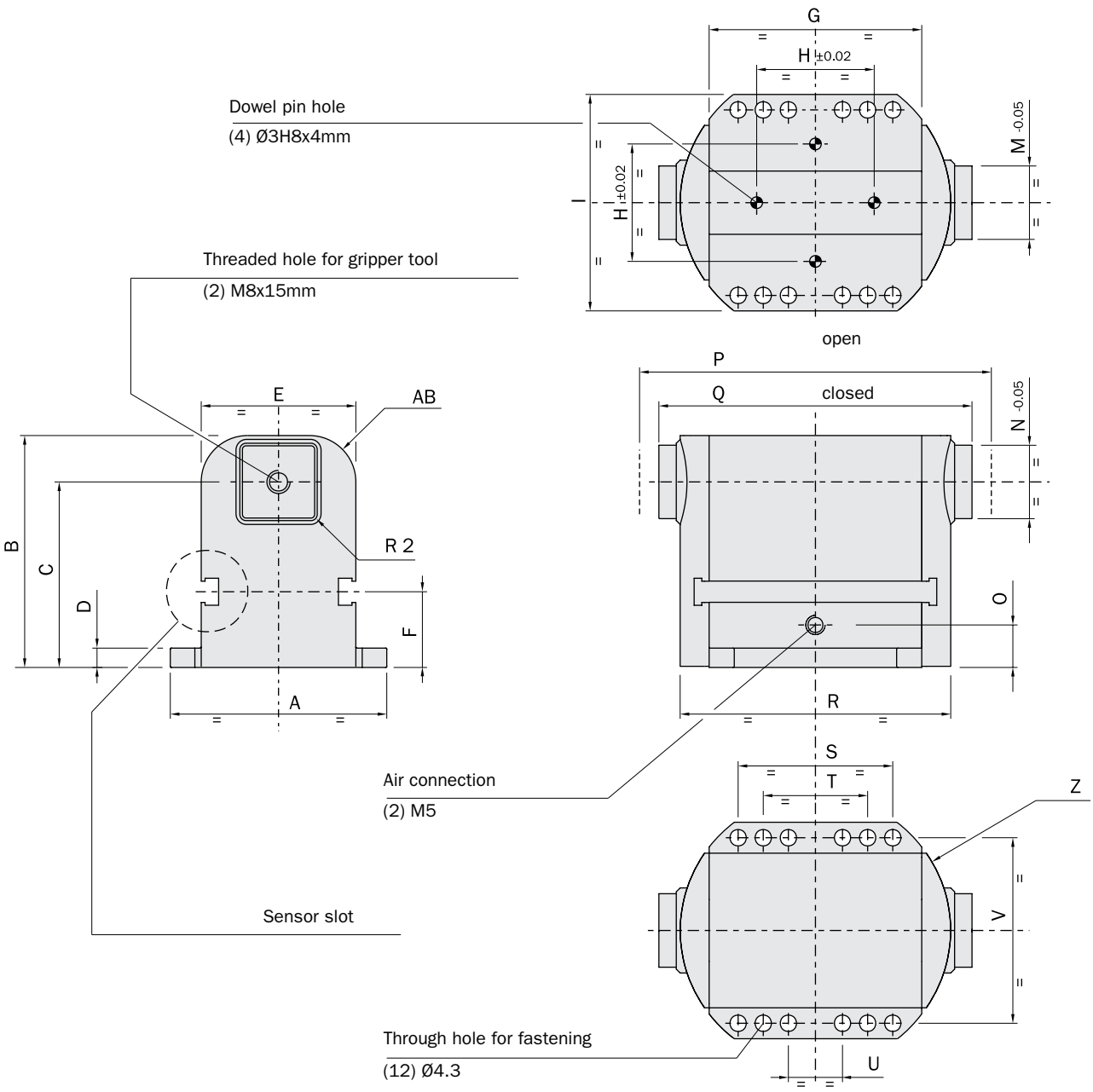

FIRST ANGLE PROJECTION

Gripping

These are pneumatic grippers for handling.
The functional principle is based on a single piston which is integral with one of the jaws.
The other one, running in opposite direction, is moved by a lever.
The gripper is double-acting for either internal or external gripping applications.

The single-acting version is available on request with a closing (NC) or opening (NO) spring.

Pressurized chamber

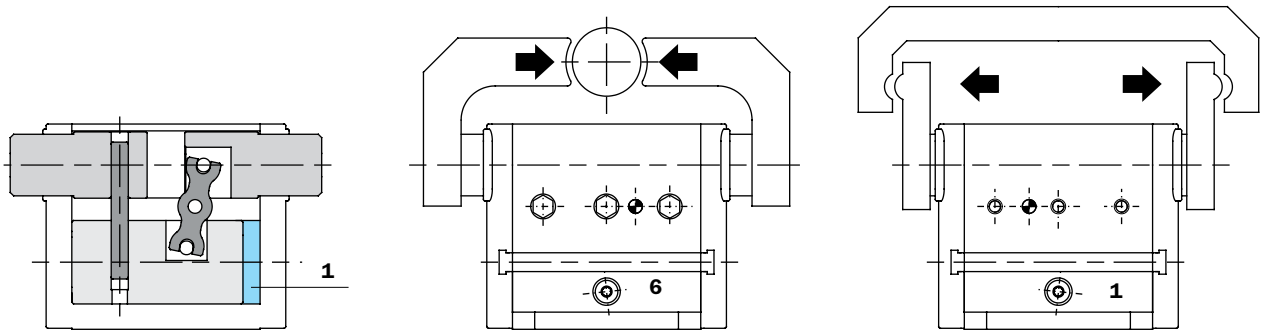

Application examples

These grippers can be easily mounted with Gimapick elements.

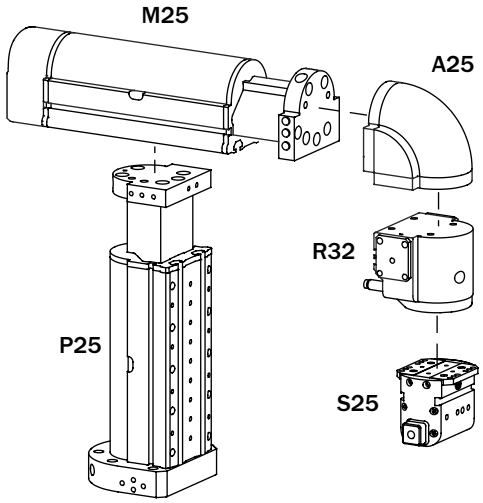

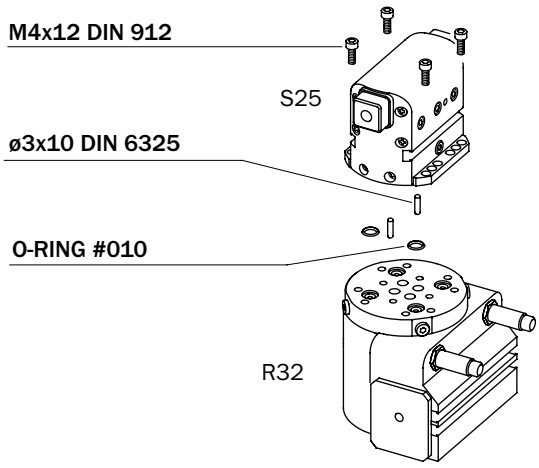

Gripping force

The graphs show the gripping force on each jaw, as a function of the operating pressure, the gripping tool length (Z) and the overhanging (X).

The force shown in these graphs refers to one jaw.
The total force is double.

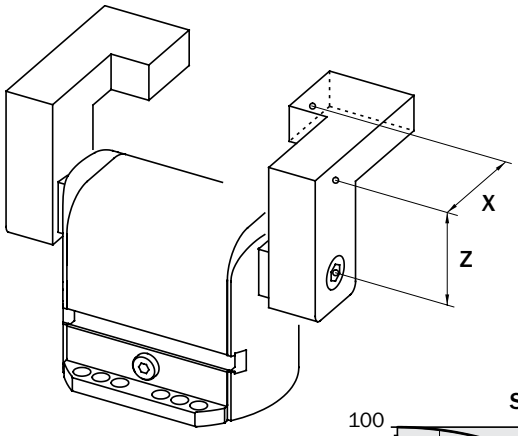

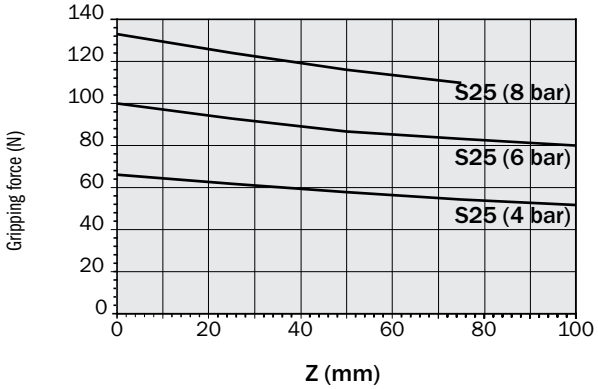

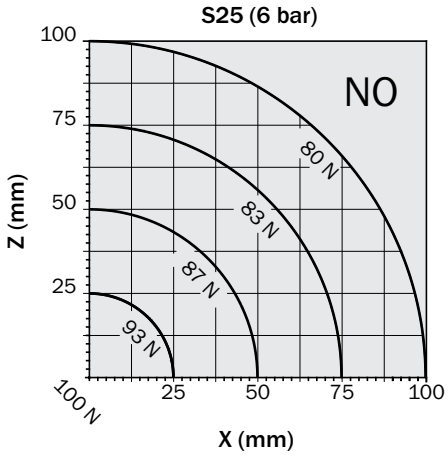

Safety loads

Check the table for maximum permitted loads.
Excessive forces or torques can damage the gripper, cause functioning troubles and endanger the safety of the operator.
F s, Mx s, My s, Mz s, are maximum permitted static loads.
Static means motionless jaws.
F d, Mx d, My d, Mz d, are maximum permitted dynamic loads.
Dynamic means running jaws.
m, is the maximum permitted weight of each gripping tool, when the gripper works without speed adjustment.
If the weight is over the permitted value, it is necessary to decrease the speed of the jaw by using flow controllers (not supplied).

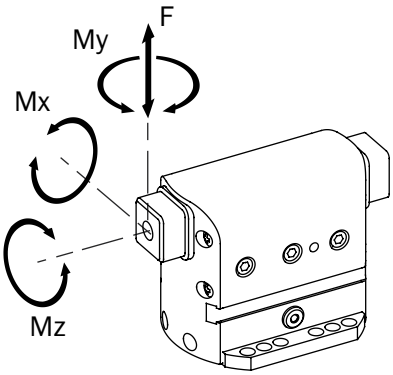

	S25
F s	300 N
Mx s	8.3 Nm
My s	8.3 Nm
Mz s	8.3 Nm
F d	3 N
Mx d	8 Ncm
My d	8 Ncm
Mz d	8 Ncm
m	150 g

Gripper fastening

The gripper can be fastened to a static or moving part. When on a moving part, you must pay attention to the forces created by inertia on the gripper and its load.
To fasten the gripper, insert at least four screws into the through holes (A) and two dowel pins in the holes (B).

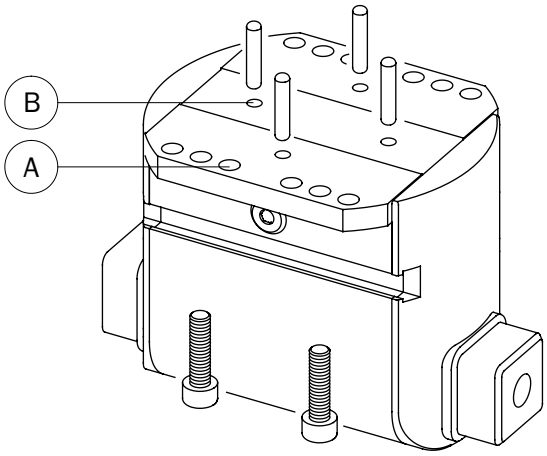

	S25
A	Ø4.3 mm
B	Ø3H8x4 mm

Gripping tool fastening

The gripping tools must be as short and light as possible.
Fit them to the jaws by centering the square calibrated profile (D) and locking with a screw through the threaded middle hole (C).

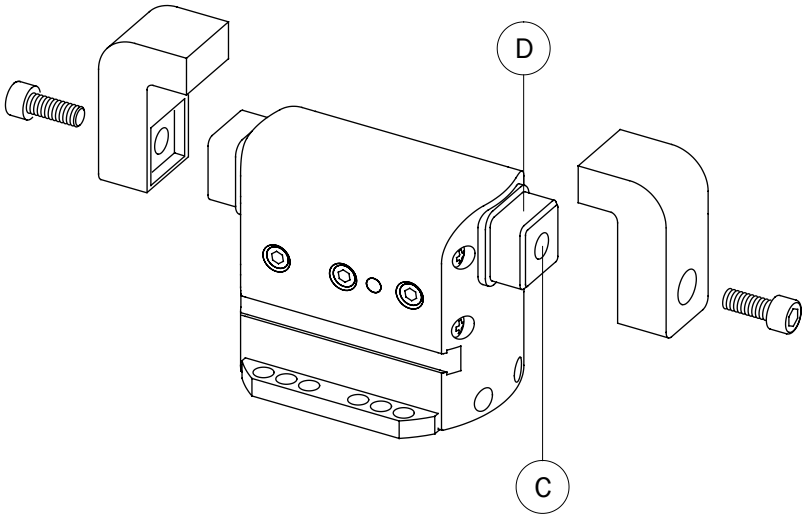

	S25
C	M8x15 mm
D	$18^{-0.05}$ x $18^{-0.05}$ mm

Sensors

The operating position is detected by proximity magnetic sensors (optional) through the magnet placed on the piston. Therefore, avoid using the gripper in the vicinity of intense magnetic fields or near a large mass of ferromagnetic material as this may cause detection errors.

The sensors that can be used are:

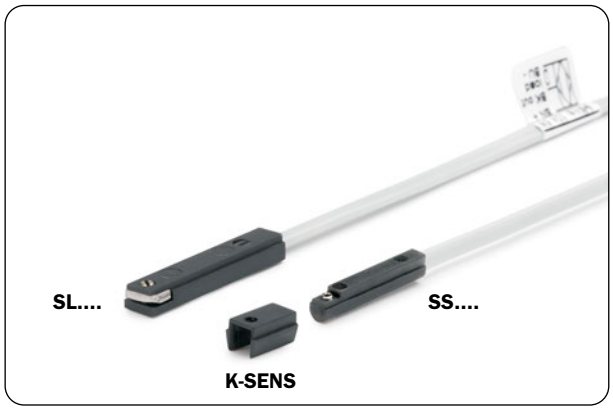

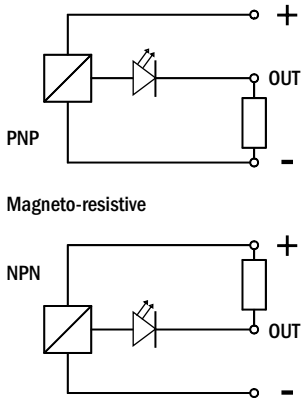

			S25	Price
SL4N225G	PNP	2.5m cable	☑	$27.20
SL4M225G	NPN	2.5m cable	☑	$27.20
SL3N203G	PNP	M8 snap plug connector	☑	$31.16
SL3M203G	NPN	M8 snap plug connector	☑	$31.16
SS4N225G	PNP	2.5m cable	☑ (1)	$27.20
SS4M225G	NPN	2.5m cable	☑ (1)	$27.20
SS3N203G	PNP	M8 snap plug connector	☑ (1)	$31.16
SS3M203G	NPN	M8 snap plug connector	☑ (1)	$31.16

(1) Must buy the adapter K-SENS separately.

Compressed air feeding

The compressed air feeding is accomplished on the lateral air ports (S) with fittings and hoses (not supplied), or directly on the bottom air ports (P) or (Q).

Compressed air in 1: gripper opening.
Compressed air in 6: gripper closing.

The compressed air, must be filtered from 5 to 40 µm.
Maintain the medium selected at the start, lubricated or not, for the complete service life of the gripper.

The pneumatic circuit must be pressurized progressively, to avoid uncontrolled movements.

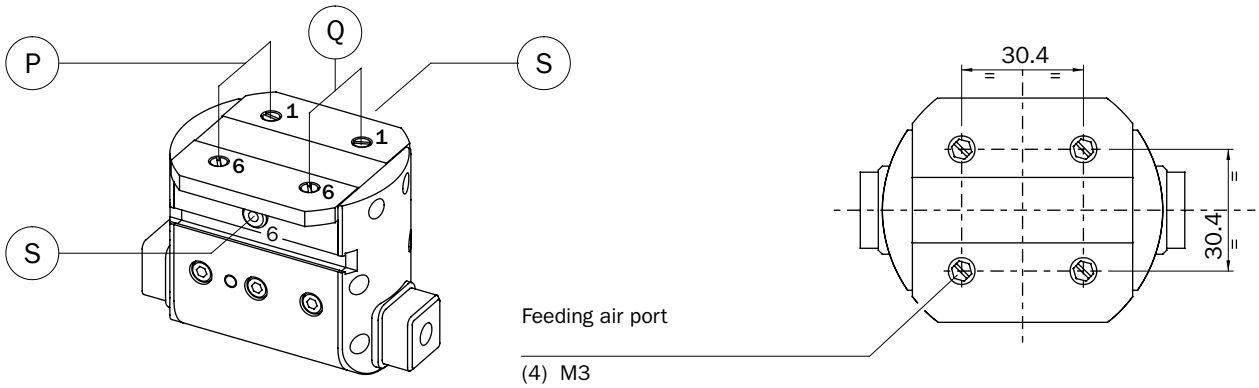

Pneumatic circuit

Possible problems on a compressed air circuit:
1- Pressure variation.
2- Pressurizing with empty cylinder.
3- Sudden pressure black-out.
4- Excessive speed of the jaws.

Possible solutions:
1- Compressed air storage (A).
2- Start-up valve (B).
3- Safety valve (C).
4- Flow controller (D).

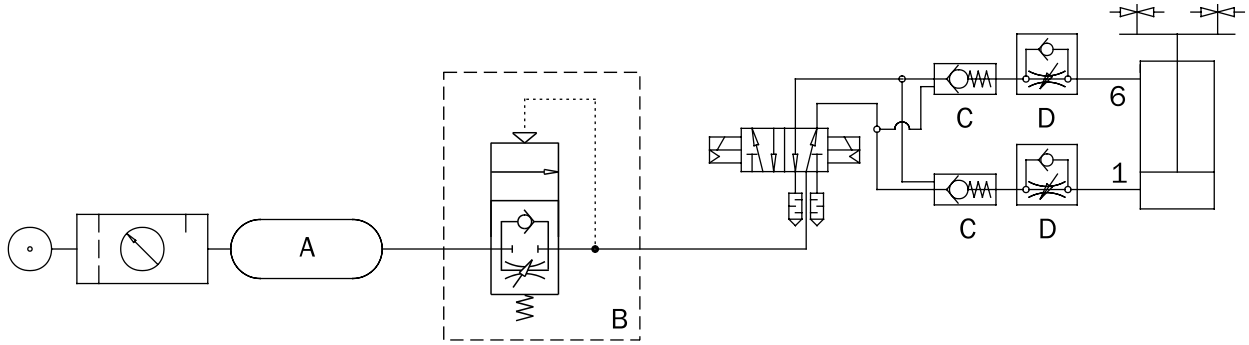

Caution

Avoid the gripper coming into contact with the following media: coolants which cause corrosion, grinding dust or glowing sparks.
Make sure that nobody can place his/her hand between the gripping tools and there are no objects in the path of the gripper.
The gripper must not run before the whole machine, on which it is mounted, complies with the laws or safety norms of your country.

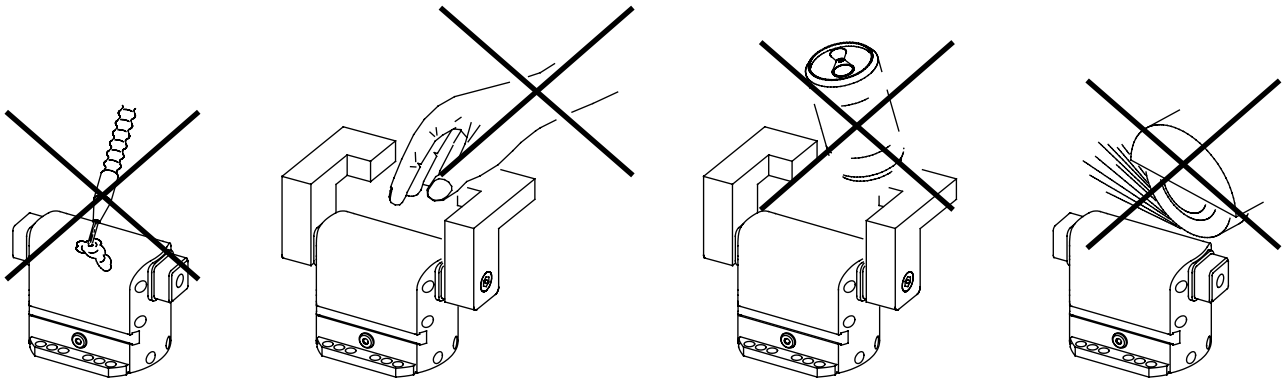

Maintenance

Grease the gripper after 10 million cycles with:
- BERULUB FG-H 2 SL
  (Lubricant NSF H1 Registration No. 135919).

The figure below shows the jaw backlash.

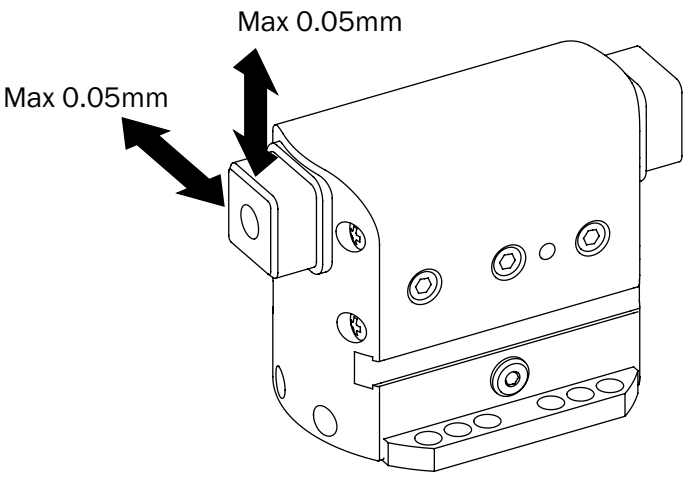

Exploded view

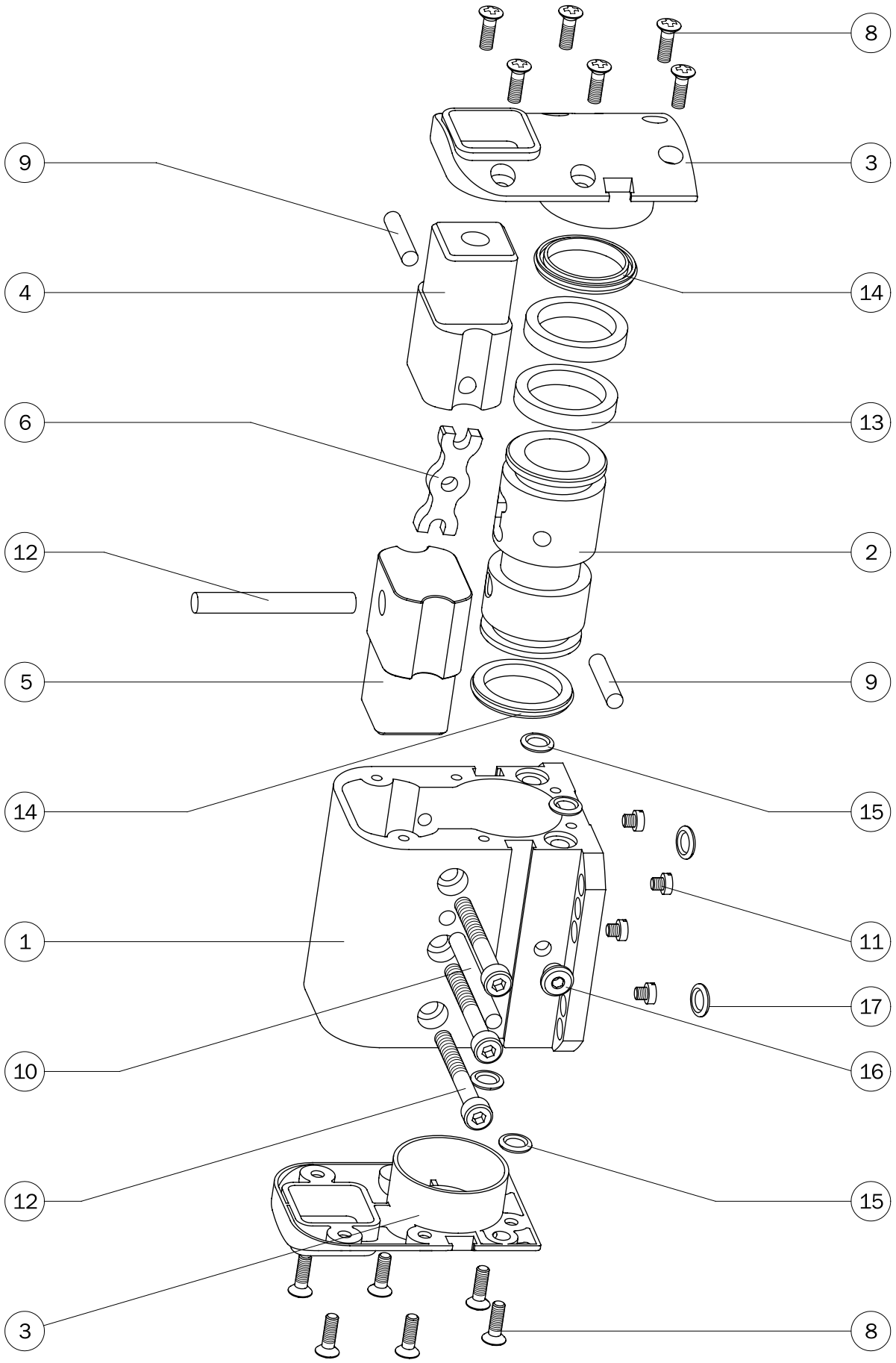

Part list

		S25		
1	Gripper housing	S25-1		*1*
2	Piston	S25-2		*2*
3	Head	S25-3		*3*
4	Jaw	S25-4		*4*
5	Jaw	S25-5		*5*
6	Lever	S25-6		*6*
7	Screw	VITE-117 (M4x35 mm INOX A2 DIN912)		*7*
8	Screw	VITE-116 (M3x10 mm INOX A2 DIN966A)		*8*
9	Dowel pin	SPINA-012 (Ø4x20 mm DIN6325)		*9*
10	Dowel pin	SPINA (Ø4x39.8 mm DIN5402)		*10*
11	Plug	DT - 205		*11*
12	Dowel pin	SPINA-013 (Ø5x40 mm DIN6325)		*12*
13	Magnet	PS-0025-P07		*13*
14	Gasket	GUAR-064 (25x19x3.5)		*14*
15	O-RING	GUAR-029 (Ø1.78x4.48)		*15*
16	Plug	107 - M5		*16*
17	O-RING	GUAR-039 (Ø1.78x6.07)		*17*